ORDER NO.VMD9908030C2

Service Manual

Digital Video Camera/Recorder

Panasonic Mini DV PAL

NV-DS11EG / NV-DS11B / NV-DS11E

VOL.1

DJ-MECHANISM

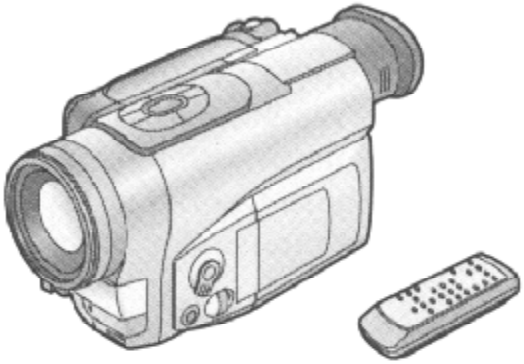

SPECIFICATIONS

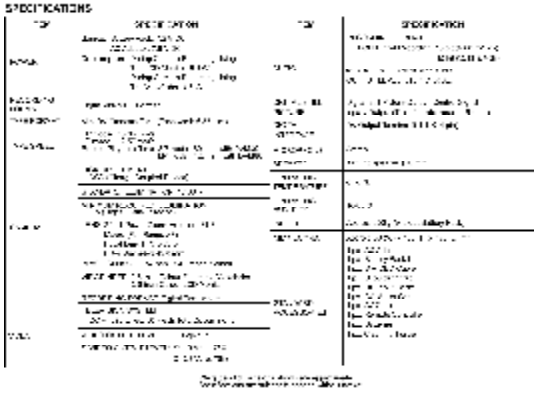

⚠ WARNING

This service information is designed for experienced repair technicians only and is not designed for use by the general public.
It does not contain warnings or cautions to advise non-technical individuals of potential dangers in attempting to service a product.
Products powered by electricity should be serviced or repaired only by experienced professional technicians. Any attempt to service or repair the product or products dealt with in this service information by anyone else could result in serious injury or death.

Panasonic

1. INTRODUCTION

1.1. INTRODUCTION1

This service manual contains technical information which will allow service personnel's to understand and service this model. Please place orders using the parts list and not the drawing reference numbers.
If the circuit is changed or modified, this information will be followed by supplement service manual to be filed with original service manual.

Note 1:
These movie camera uses AC Adaptor is VSK0565.
The service manual for AC Adaptor is separate volume.
Order number for AC Adaptor-----VSK0565 : VMD9908033C8

Note 2:
This service manual does not contain the following information, because of the impossibility of sevicing at component level.

1. Schematic Diagram, Block Diagram and C.B.A. of Main C.B.A.

2. Parts List for individual parts of Main C.B.A.

When a part replacement is required for repairing Main C.B.A., replace the assembly parts.
The following circuits are contained in Main C.B.A.

1. Main Connection Circuit

2. Audio Circuit

3. Motor Drive Circuit

4. Video 1 Circuit

5. Video 2 Circuit

6. Video 3 Circuit

7. Control Circuit

8. Camera Circuit

9. Digital Interface Circuit

10. Lens Drive Circuit

11. LCD Circuit

12. RS232C Circuit

2. CAUTION FOR AC CORD (VJA0940 TYPE)

2.1. INFORMATION FOR YOUR SAFETY

IMPORTANT
Your attention is drawn to the fact that recording of pre-recorded tapes or discs or other published or broadcast material may infringe copyright laws.

WARNING

To reduce the risk of fire or shock hazard, do not expose this equipment to rain or moisture.

CAUTION

To reduce the risk of fire or shock hazard and annoying interference, use the recommended accessories only.

FOR YOUR SAFETY
DO NOT REMOVE THE OUTER COVER
To prevent electric shock, do not remove the cover. No user serviceable parts inside. Refer servicing to qualified service personnel.

2.2. CAUTION FOR AC MAINS LEAD

For your safety, please read the following text carefully.
This appliance is supplied with a moulded three-pin mains plug for your safety and convenience.
A 5-ampere fuse is fitted in this plug.
Should the fuse need to be replaced please ensure that the replacement fuse has a rating of 5 amperes and it is approved by ASTA or BSI to BS1362
Check for the ASRA mark or the BSI mark on the body of the fuse.

If the plug contains a removable fuse cover you must ensure that it is refitted when the fuse is replaced.
If you lose the fuse cover, the plug must not be used until a replacement cover is obtained.
A replacement fuse cover can be purchased from your local Panasonic Dealer.
If the fitted moulded plug is unsuitable for the socket outlet in your home then the fuse should be removed and the plug cut off and disposed of safety.
There is a danger of severe electrical shock if the cut off plug is inserted into any 13-ampere socket.
If a new plug is to be fitted please observe the wiring code as shown below.
If in any doubt, please consult a qualified electrician.

2.2.1. Important

The wires in this mains lead are coloured in accordance with the following code:

Blue	**Neutral**
Brown	**Live**

As the colours of the wires in the mains lead of this appliance may not correspond with the coloured markings identifying the terminals in your plug, proceed as follows:
The wire which is coloured BLUE must be connected to the terminal in the plug which is marked with the letter N or coloured BLACK.
The wire which is coloured BROWN must be connected to the terminal in the plug which is marked with the letter L or coloured RED.
Under no circumstances should either of these wires be connected to the earth terminal of the three pin plug, marked with the letter E or the Earth Symbol.

2.2.2. Before use

remove the Connector Cover as follows.

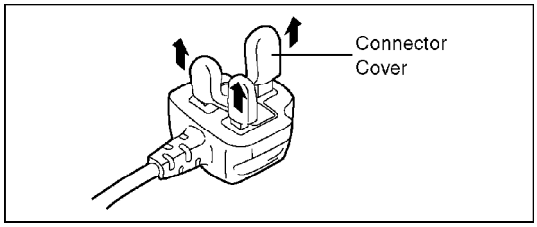

2.2.3. How to replace the Fuse

1. Remove the Fuse Cover with a screwdriver.

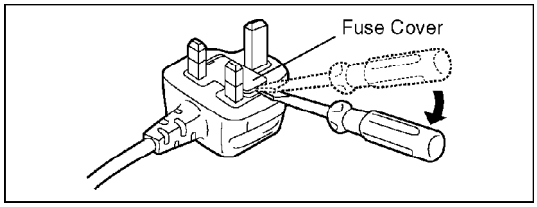

2. Replace the fuse and attach the Fuse cover.

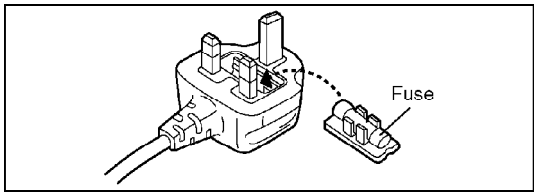

3. SERVICE CAUTION

3.1. EEPROM DATA FOR SPARE PARTS OF THE MAIN C.B.A.

When the Main C.B.A. is replaced, the fixed and average data must be changed by Tatsujin kit according to the Movie Camera's suffix.
Then, confirm and/or adjust the VTR and Camera adjustment one by one.

3.2. SERVICE EXTENSION CABLES.

This models is required the following extension cables for all connections.

Note 1:
Use the following extension cables when checking or adjusting individual circuit boards except module Parts. (Main C.B.A.)

Ref.	Part No.	Pin	Part Name	Connection	Q'ty	Ren
(1)	VFK1367	50	Flat Cable	PS2001(Drive)-PP2001(Main)	1	As N
(2)	VFK1284	24	Flat Cable	PP3201(Main)-Head Amp C.B.A.	1	N
(3)	VFK1292	9	Flat Cable	FP2003(Drive)-Mecha.Cyl.Flex.	1	N
(4)	VFK1282	22	Flat Cable	PP2002(Drive)-Mecha.Cap.Flex.	1	N
(5)	VFK1174	30	Flat Cable	FP2004(Drive)-Mecha.Flex.	1	As N
(6)	VFK1364	14	Flat Cable	FP6002(Main)-FP6701(Rear Op.)	1	As N
(7)	VFK1441	8	Flat Cable	FP6001(Main)-Top Op.Flex.	1	As N
(8)	VFK1545	100	Flat Cable	PS1001(Main)-PP1001(Sub)	1	N
(9)	VFK1456	17	Flat Cable	FP1201(Sub)-FP903(Monitor)	1	N
(10)	VFK1452	17	Flat Cable	FP601(Main)-FP904(Monitor)	1	As N
(11)	VFK1460	20	Flat Cable	PS201(Main)-CCD Flex.Card C.B.A.	1	As N
(12)	VFK1443	18	Flat Cable	FP701(Main)-Lens Flex.	1	As N
(13)	VFK1443	18	Flat Cable	FP3501(Main)-FP801(E.V.F.(B))	1	As N
(14)	VFK1443	18	Flat Cable	FP4802(Main)-FP4801(Mic Unit)	1	As N

How to use extension cables.

Fig. T1-1

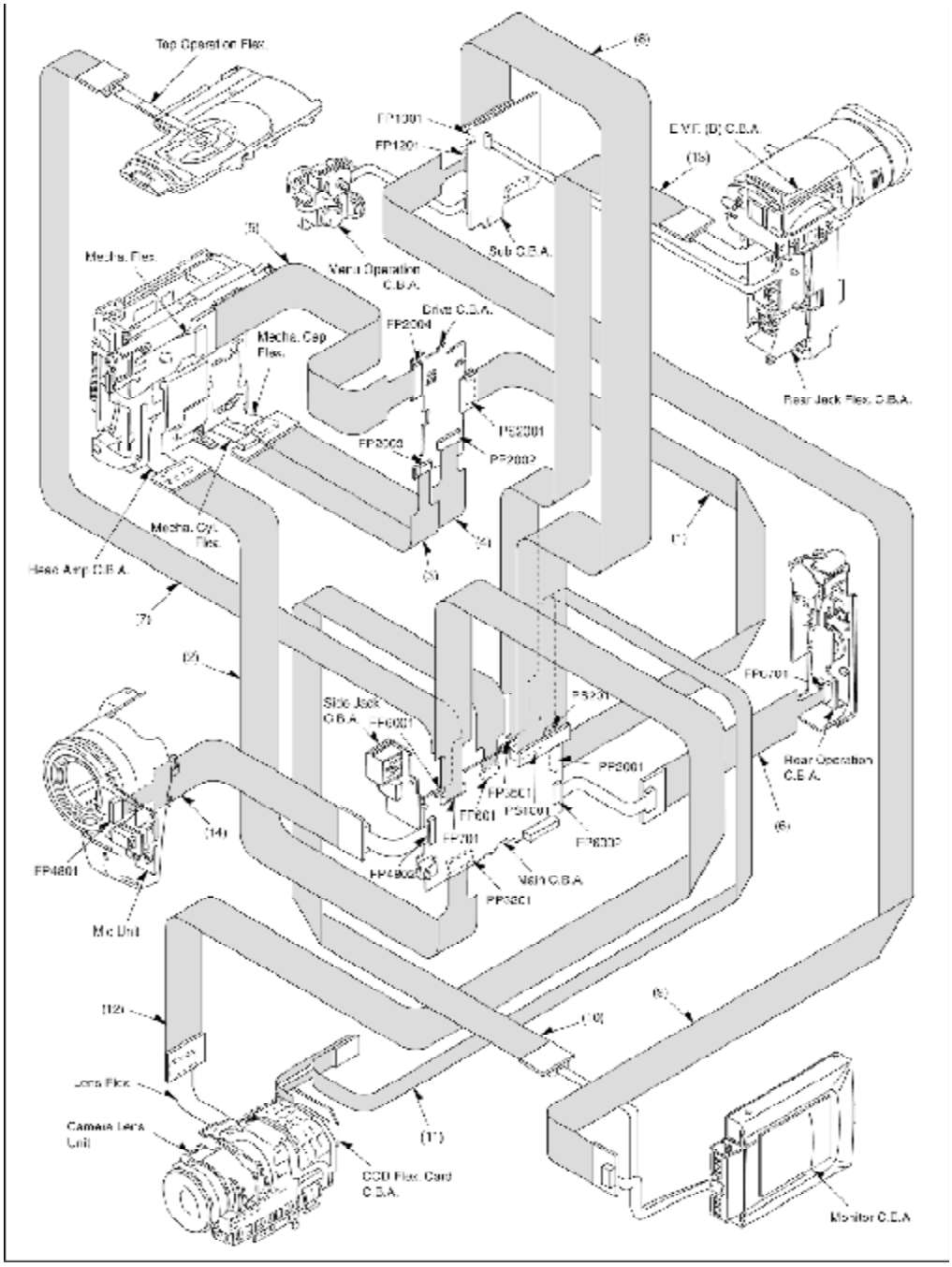

4. PREPARATION FOR ELECTRICAL ADJUSTMENT

1. Remove the Screw and EVR Connector Cover as follows.

2. Then connect the following cables as shown in Fig. Fig. E2.

Fig. E1

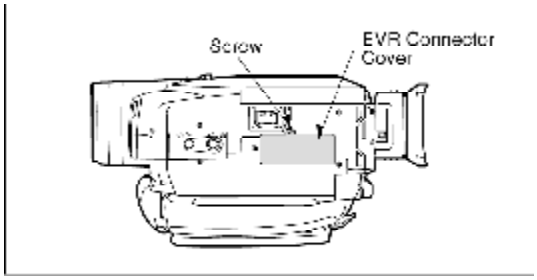

Part No.	Part Name	Q'ty	Remarks
VFK1395	232C(M3)I/F Cable	1	
VFK1308E	Measuring Board	1	
VFK1309	EVR Connector Board	1	
VFK1317	30 Pin Flat Cable	2	
VJA0941	DC Output Cable	1	For AC Adaptor
VFK1164TAR43	Setup Ring (Φ43.0 mm)	1	For Collimator
VFK1309EX	Connection Adaptor	1	

Fig. E2

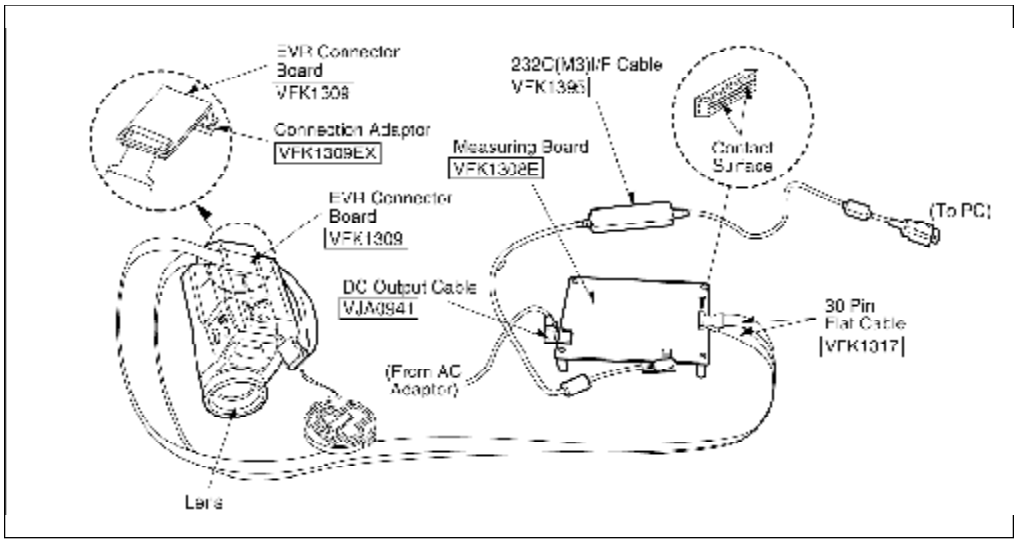

Fig. E3

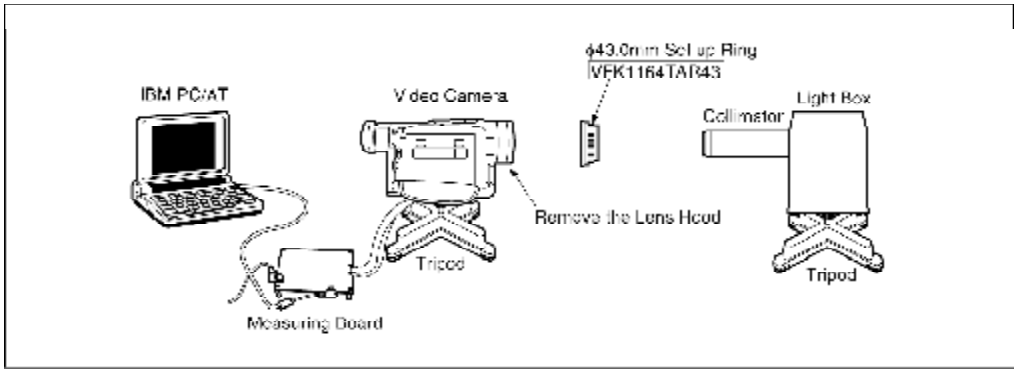

5. SERVICE MODE

When undesirable conditions occurred, the error code is displayed on the EVF or LCD Monitor. Also, the Camera LED is flashed according to the error code as follows.

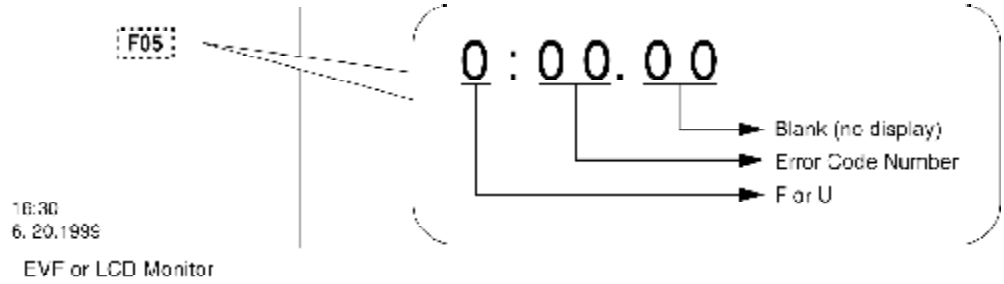

EVF or LCD Monitor

DISPLAY	CONDITION	POWER OFF TIMING / POWER LED FLASHING TIMING
F01	T-Reel Lock	After 1 minute flashing the LED
F02	S-Reel Lock	After 1 minute flashing the LED
F03	Unloading Lock	After 1 minute flashing the LED
F04	Loading Lock	After 1 minute flashing the LED
F05	Cylinder Lock	After 1 minute flashing the LED
F31	Data Transmission Error	Not turning OFF
F51	Focus Motor Lock	Not turning OFF Power LED is flashed at 1 Hz timing
F52	Zoom Motor Lock	Not turning OFF Power LED is flashed at 1 Hz timing
U10	Dew Detection	After 18 seconds flashing the LED Power LED is flashed at 1 Hz timing
U11	Head Clogging	Not turning OFF

6. HOW TO REPLACE THE LITHIUM BATTERY (PROCEDURE)

1. **Remove the Mic Unit from Front Case Unit. (Refer to Disassembly Procedures.)**
2. **Unsolder the Lithium Battery “VL2020/1HF” and then replace the new one. (See Fig. B1)**

Fig. B1

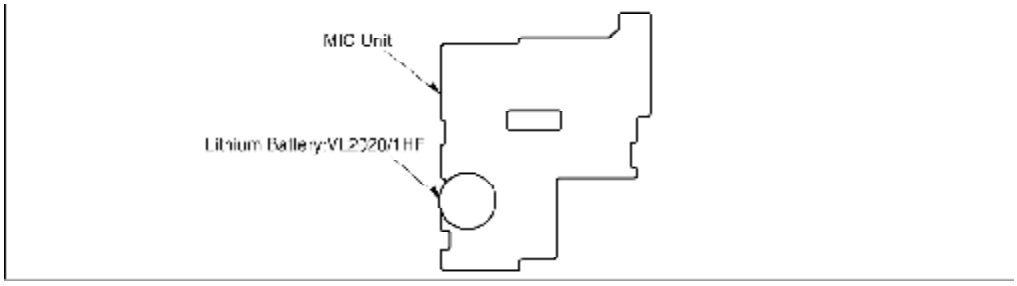

Note:
The lithium battery is a critical component. (Type No.: VL2020/1HF Manufactured by Panasonic.)
It must never be subjected to excessive heat or discharge.
It must therefore only be fitted in equipment designed specifically for its use.
Replacement batteries must be of the same type and manufacture.
They must be fitted in the same manner and location as the original battery, with the correct polarity contacts observed.
Do not attempt to re-charge the old battery or re-use it for any other purpose.
It should be disposed of in waste products destined for burial rather than incineration.

CAUTION

Danger of explosion if battery is incorrectly replaced.
Replace only with the same or equivalent type recommended by the equipment manufacturer.
Discard used batteries according to manufacturer's instructions.

VARNING

Explosionsfara vid felaktigt batteribyte.
Använd samma batterityp eller en ekvivalent typ som rekommenderas av apparattillverkaren.
Kassera använt batteri enligt fabrikantens instruktion.

ADVARSEL!

Lithiumbatteri - Eksplosionsfare ved fejlagtig håndtering.
Udskiftning må kun ske med batteri af samme fabrikat og type.
Levér det brugte batteri tilbage til leverandøren.

VAROITUS

Paristo voi räjähtää, jos se on virheellisesti asennettu.
Vaihda paristo ainoastaan laitevalmistajan suosittelemaan tyyppiin. Hävitä käytetty paristo valmistajan ohjeiden mukaisesti.

7. GENERAL DESCRIPTIONS

8. ADJUSTMENT PROCEDURES

8.1. DISASSEMBLE FLOW CHART

This flow chart indicates the disassembly steps the cabinet parts, C.B.A. and Mecha. Unit in order

to access to be serviced. When reinstalling, perform the steps in the reverse order.

1. Front Case Unit (Mic Unit)
2. Rear Case Unit (Rear Operation C.B.A.)
3. Side Case (L) Unit (Side Jack C.B.A.)
4. Mecha. Uni. (Head Amp C.B.A.)
5. Main / Sub C.B.A.
6. Top Case Unit (Top Operation Flex.)
7. Camera Lens Unit
8. Rear Jack Unit (Rear Jack C.B.A.)
9. LCD Unit (Monitor / Hall Sensor Flex. C.B.A.)
10. EVF Unit (E.V.F. (A) / (B) C.B.A.)

Fig. F1

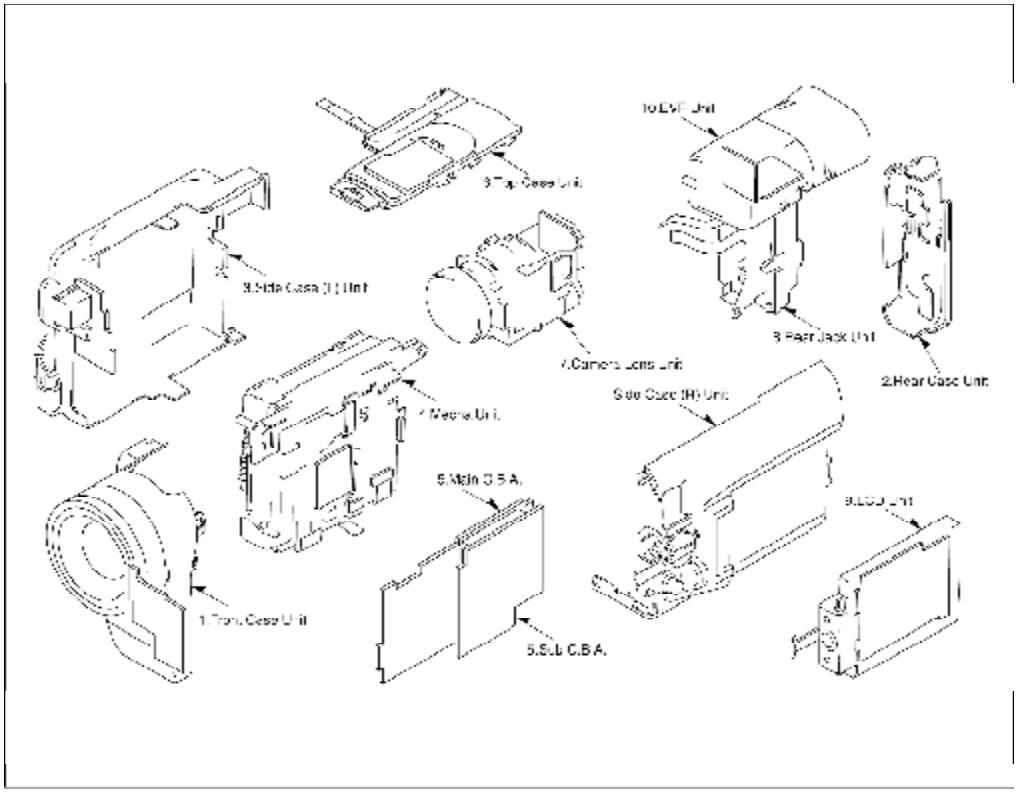

8.2. DISASSEMBLY PROCEDURES

Flow-Chart for Disassembly Procedure

No.	Item/Part	Fig.	Removal (Screw & Other)
1.	Front Case Unit	Fig. 1-1	2-Screws (A/B)
		Fig. 1-2	3-Screws (C/D)
		Fig.1-3	Remove the Front Case Unit. Unhook---(a) Disconnect FP4801. Remove the Mic Unit.
2.	Rear Case Unit	Fig.2-1	4-Screws (E/F/G)
		Fig.2-2	7-Screws (H/I/J/K/L/M) Slide the Rear Case Unit. Disconnect the FP6701. Remove the Rear Case Unit.
3.	Side Case (L) Unit	Fig. 3	10-Screws (N/O/P/Q/R) Remove the Side Case (L) Unit. Remove the Side Jack C.B.A.
4.	Mecha. Unit	Fig. 4	Disconnect FP3201/PP2001. 2-Screws (S/T) Remove the Mecha. Unit.
5.	Main/Sub C.B.A.	Fig. 5	2-Screws (S) Disconnect the following connectors. FP801/FP601/PS201/FP6001/ FP701/PS1001. Unhook---(b/c) Remove the Main C.B.A. 1-Screw (U) Disconnect the following connectors. FP1003/PP1001/FP1001/ FP1004/ / FP1201. Remove the Sub C.B.A.
6.	Top Case Unit	Fig. 6	Side the Top Case Unit. Remove the Top Case Unit.
7.	Camera Lens Unit	Fig. 7-1	3-Screws (V/W) Remove the Lens Frame. Remove the Camera Lens Unit.
		Fig. 7-2	1-Screw (X) Unhook---(d) Remove the Top Frame.

No.	Item/Part	Fig.	Removal (Screw & Other)
8.	Rear Jack Unit	Fig. 8-1	3-Screws (Y/Z)
		Fig. 8-2	4-Screws (a/b)
		Fig. 8-3	3-Screws (c)
		Fig. 8-4	1-Screw (d) Remove the LCD Lock Piece. Remove the Rear Jack Unit with EVF Unit.
9	LCD Unit	Fig. 9-1	2-Screws (e/f) Remove the Camera Frame.
		Fig. 9-2	2-Screws (g)
		Fig. 9-3	2-Screws (h) Remove the LCD Fixing Angle/LCD / Hinge Cover. Remove the LCD Unit from Side Case (R) Unit.
		Fig. 9-4	4-Screws (i) Remove the LCD Case (Upper). Disconnect the following connectors. FP901/FP904/FP903/FP905. 1-Screw (j) Unsolder the Lead Wires. Remove the Hall Sensor Flex. C.B.A. Remove the LCD Rotary Hinge Unit. Remove the Monitor C.B.A.

No.	Item/Part	Fig.	Removal (Screw & Other)
10.	EVF Unit	Fig. 10 -1	Unlock the locking portions. Remove the Rear Jack Flex. C.B.A.
		Fig. 10 -2	4-Screws (k) Remove the EVF Rotary Spring/EVF Rotary Holder/ EVF Rotary Piece. Remove the EVF Unit.
		Fig. 10 -3	4-Screws (l/m) Remove the Eye Cap Holder Unit.
		Fig. 10 -4	Unhook---(e) 1-Screw (n) Remove the EVF Protect Panel/EVF Sheet. Disconnect the FP801/FP802. Remove the E.V.F. (B) C.B.A.
		Fig. 10 -5	Unsolder the LCD Shield Case. Unhook---(f) Remove the E.V.F. (A) C.B.A.

Fig. 1-1

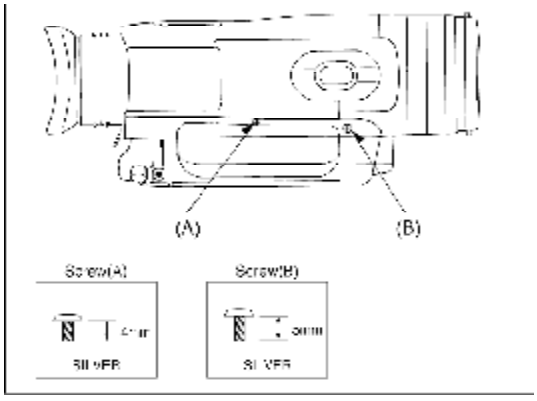

Fig. 1-2

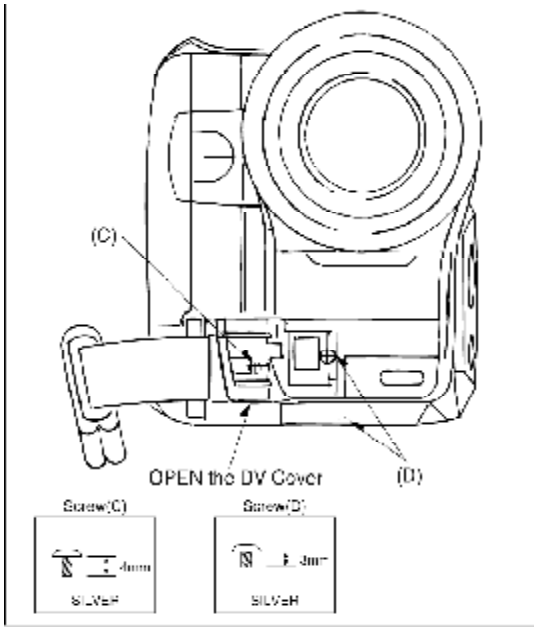
(C)
OPEN the DV Cover
(D)
Screw(C)
Screw(D)
SILVER
SILVER

Fig.1-3

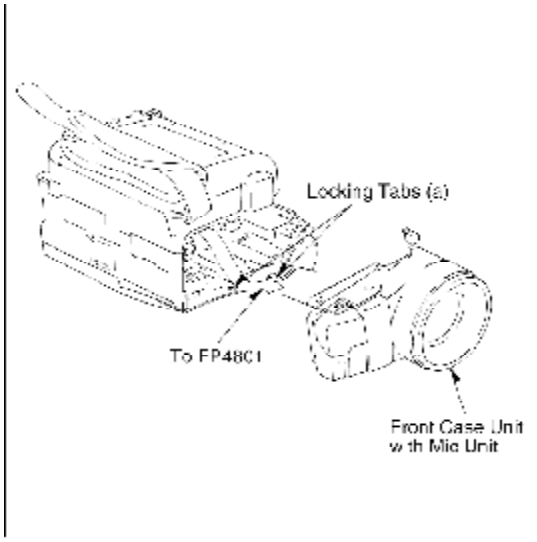
Locking Tabs (a)
To FP48C1
Front Case Unit
with Mic Unit

Fig.2-1

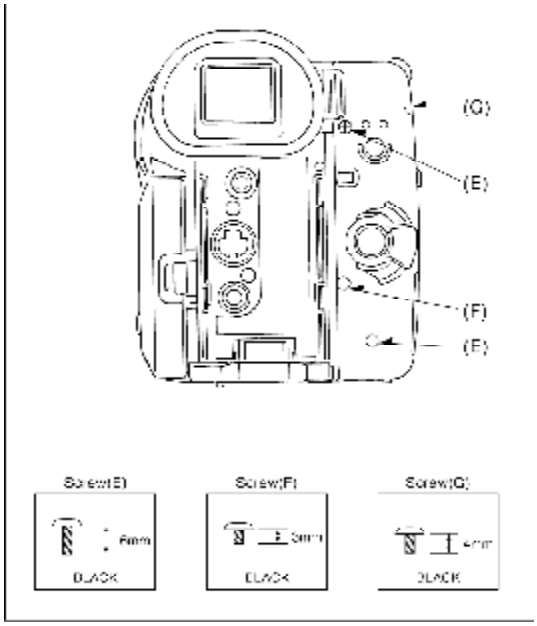
(G)
(E)
(F)
(F)
Screw(E)
Screw(F)
Screw(G)
BLACK
BLACK
BLACK

Fig.2-2

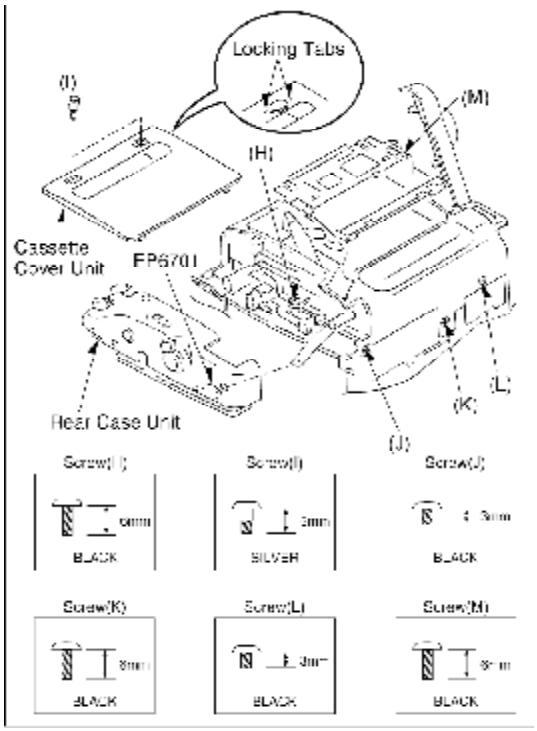
Locking Tabs
(I)
(M)
(H)
Cassette
Cover Unit
FP6701
Rear Case Unit
(J)
(K)
(L)
Screw(I)
Screw(J)
BLACK
BLACK
Screw(K)
Screw(L)
Screw(M)
BLACK
BLACK
BLACK

Fig. 3

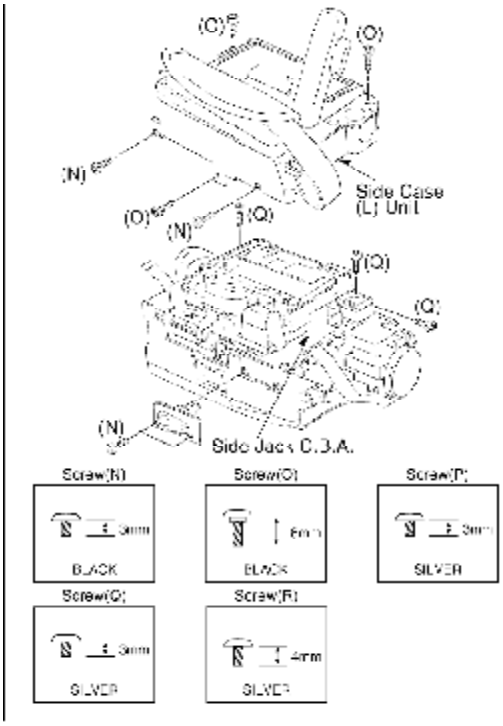
(C)
(O)
(N)
Side Case
(L) Unit
(O)
(N)
(Q)
(Q)
(Q)
(N)
Side Jack C.B.A.
Screw(N)
Screw(O)
Screw(P)
BLACK
BLACK
SILVER
Screw(Q)
Screw(R)
SILVER
SILVER

Fig. 4

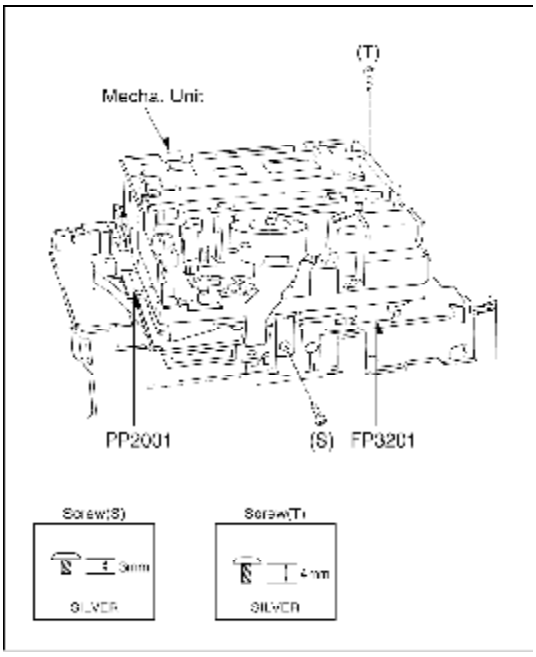
(T)
Mecha. Unit
PP2001
(S)
FP3201
Screw(S)
Screw(T)
SILVER
SILVER

Fig. 5

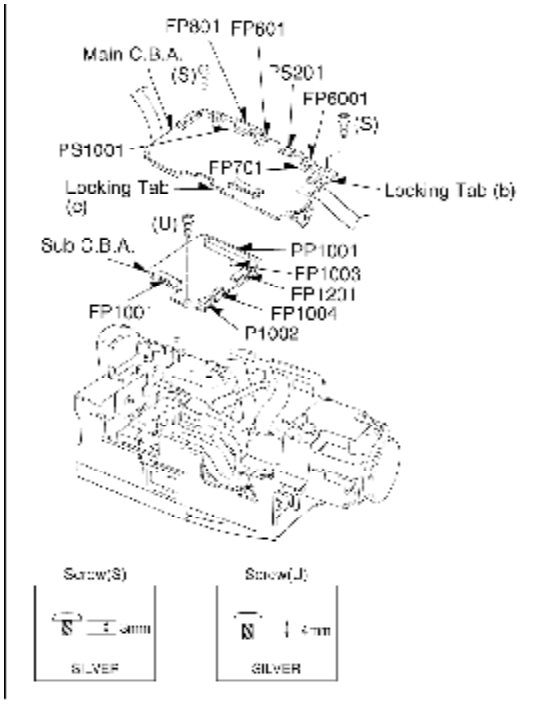
FP801
FP601
Main C.B.A.
(S)
PS201
FP6001
(S)
PS1001
FP701
Locking Tab
(c)
Locking Tab (b)
(U)
Sub C.B.A.
PP1001
FP1003
FP1201
FP100
FP1004
P1002
Screw(S)
Screw(J)
SILVER
SILVER

Fig. 6

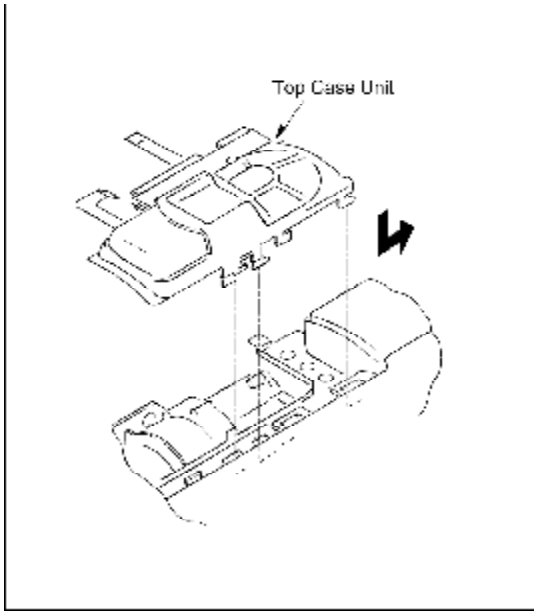
Top Case Unit

Fig. 7-1

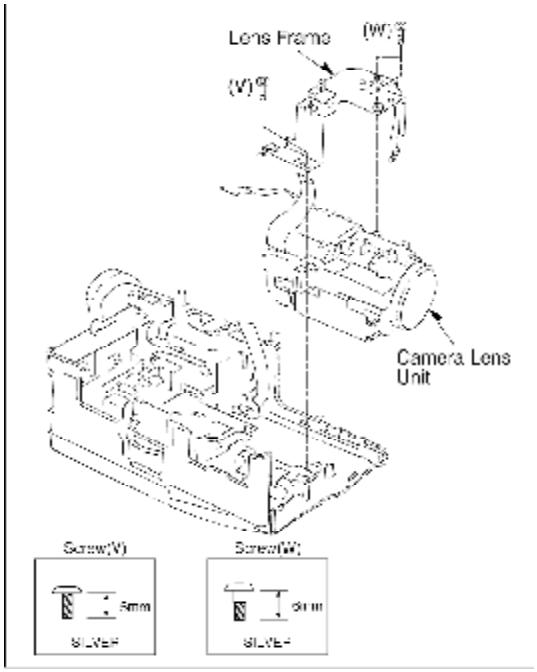
Lens Frame
(W)
(V)
Camera Lens Unit
Screw(V)
Screw(W)
4mm
SILVER
SILVER

Fig. 7-2

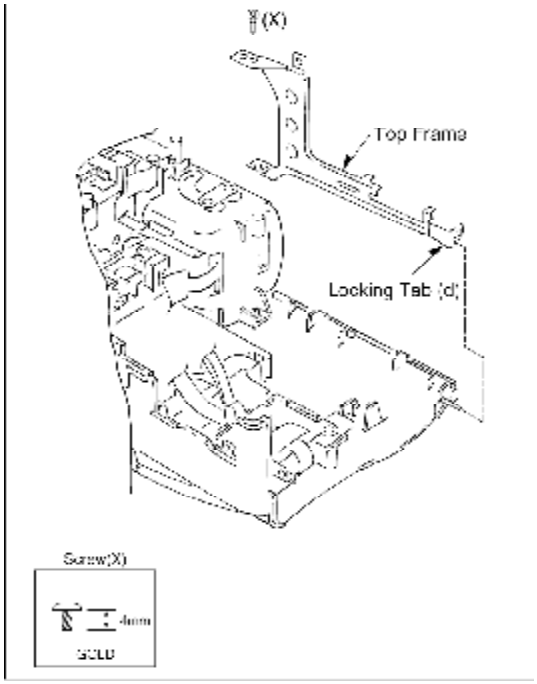
(X)
Top Frame
Locking Tab (d)
Screw(X)
4mm
GOLD

Fig. 8-1

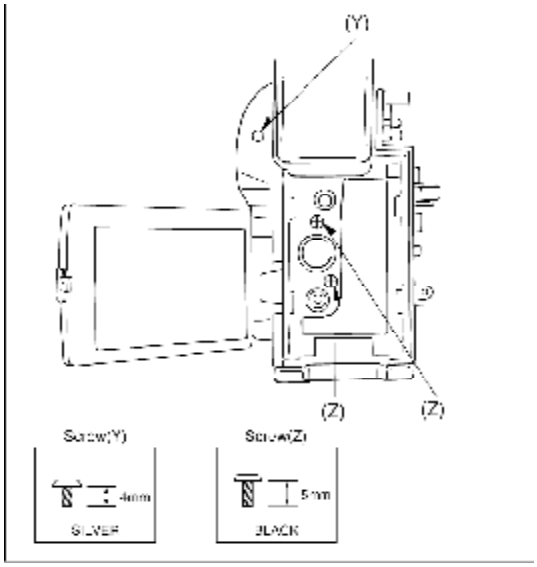

Fig. 8-2

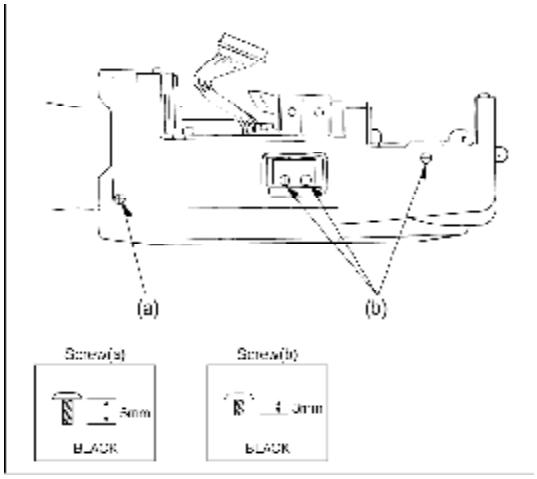

Fig. 8-3

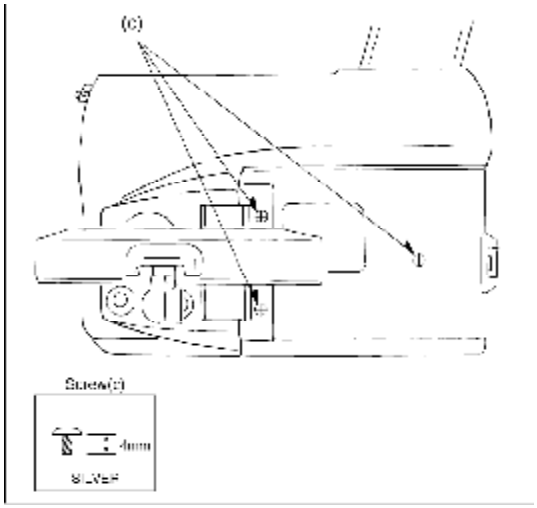

Fig. 8-4

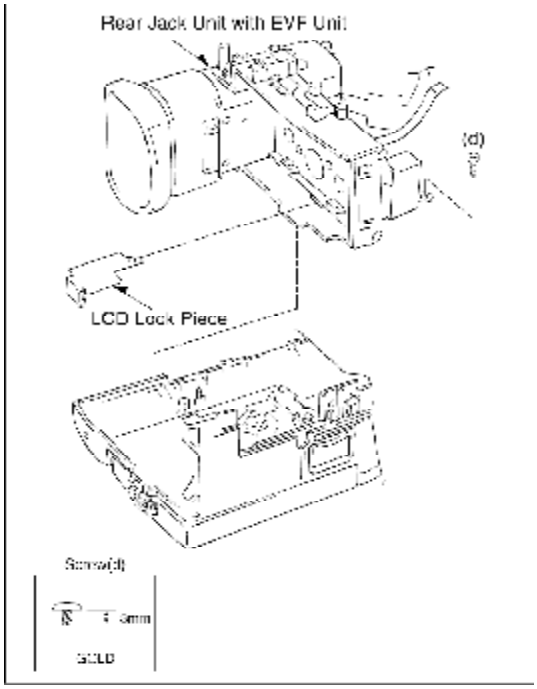

Fig. 9-1

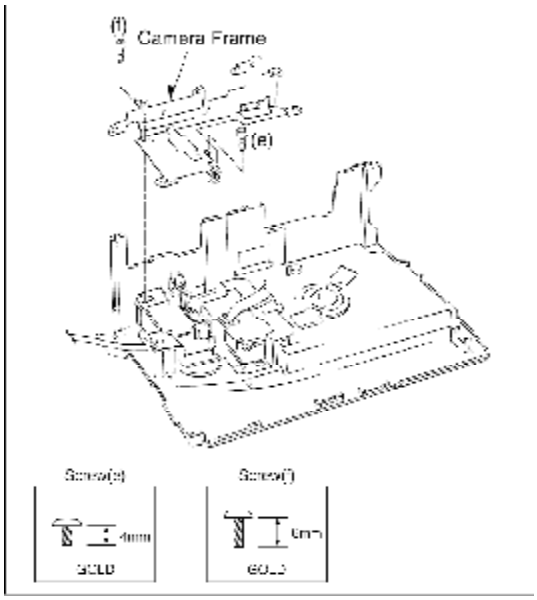

Fig. 9-2

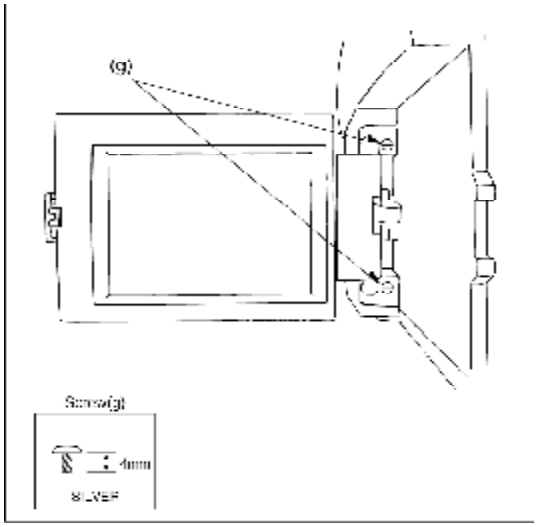
(g)
Screw(g)
4mm
SILVER

Fig. 9-3

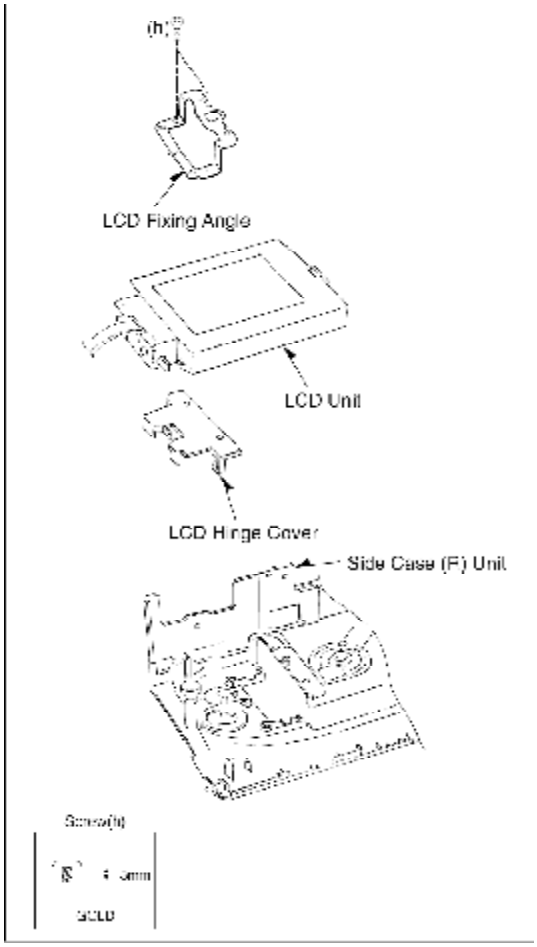
(h)
LCD Fixing Angle
LCD Unit
LCD Hinge Cover
Side Case (F) Unit
Screw(h)
4mm
GOLD

Fig. 9-4

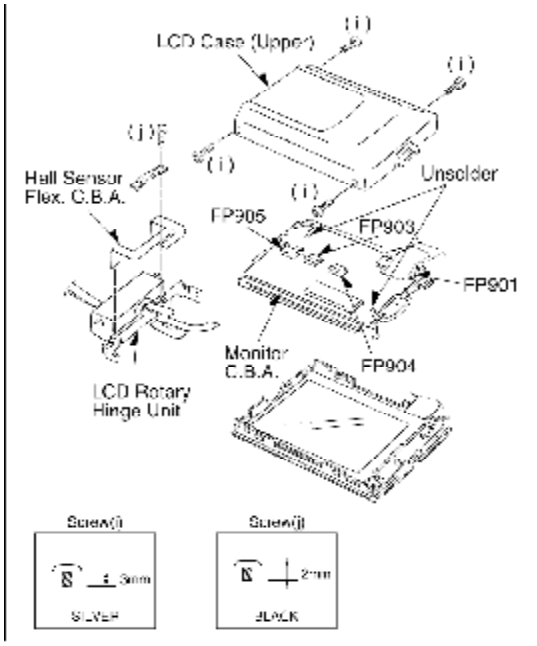

Fig. 10-1

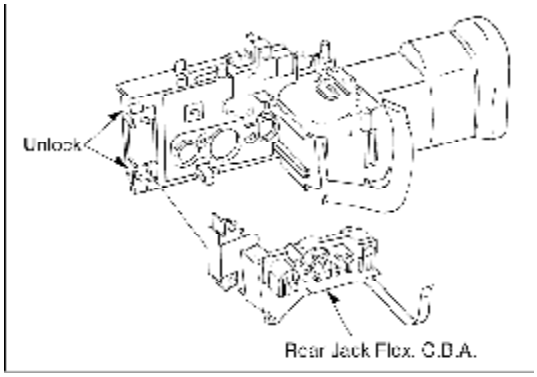

Fig. 10-2

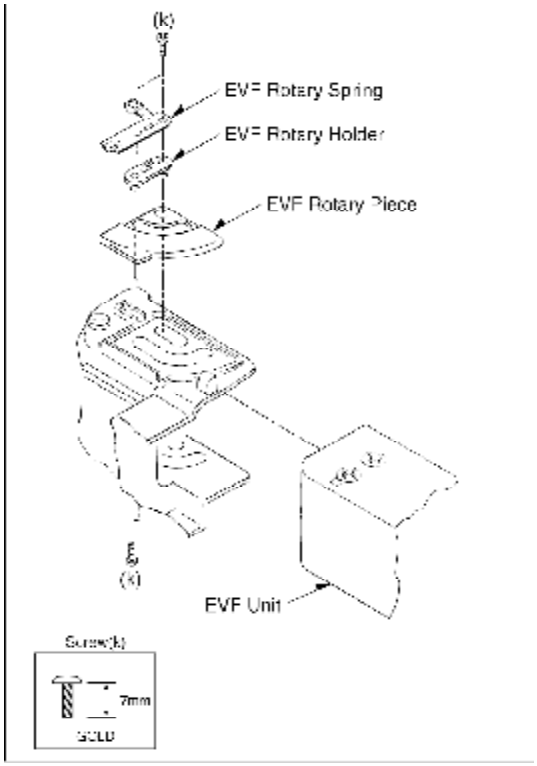

Fig. 10-3

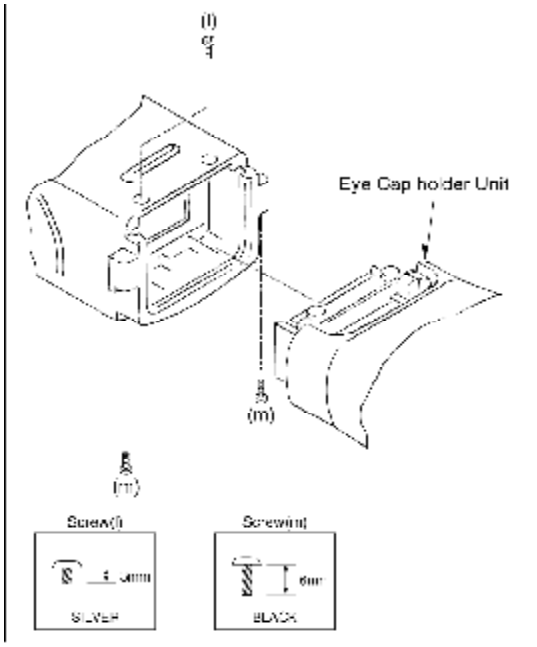

Fig. 10-4

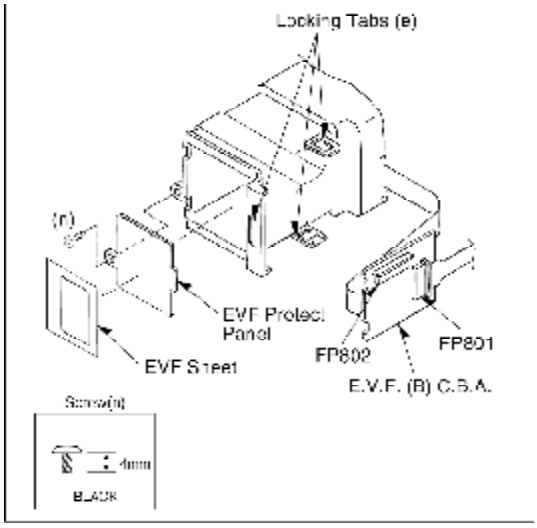

Fig. 10-5

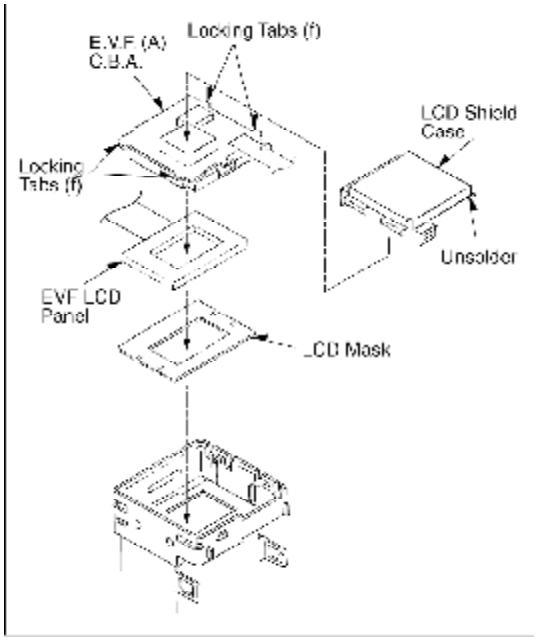

8.3. DISASSEMBLY PROCEDURES OF CAMERA LENS UNIT

The following flowchart describes order or steps for removing the Camera lens unit and certain printed circuit boards in order to make access to the item needing service. / To reassemble the unit follow the steps in reverse order.

Fig. L1

1. CCD Unit	Ref.No. 302
2. CCD Cushion & Crystal Filter	Ref.No. 301/303
3. Lens Flex. & Sensor/ Zoom Motor/ Iris	Ref.No. 304-2/304-3/304-4
4. Main Frame Unit	Ref.No. 304-10
5. Iris Unit	Ref.No. 304-7
6. 3rd Moving Frame Unit	Ref.No. 304-11
7. 4th Moving Frame Unit	Ref.No. 304-9

Note 1:
Iris Unit connect to the Lens Flex.
Please handle the Lens Flex. with care during disassembly and assembly.
Also, Zoom Motor, Focus Lens Unit are connected to the Lens Flex.

Note 2:
Each Ref numbers are equivalant to number of Fig. L1 and Parts List.

Fig. L2

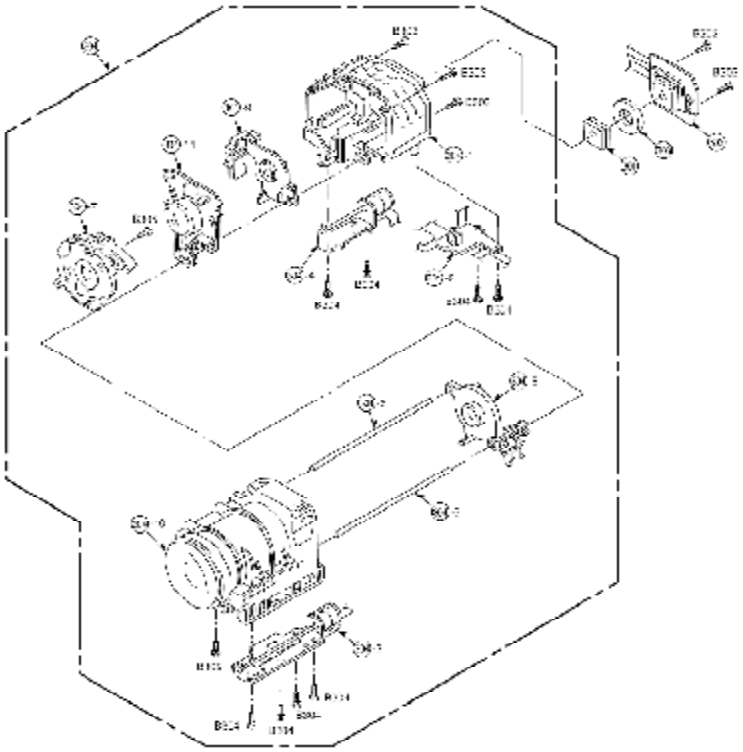

9. ABBREVIATIONS

10. WAVEFORM TABLE

11. SCHEMATIC DIAGRAMS

11.1. OVERALL SCHEMATIC DIAGRAM

11.2. INTERCONNECTION SCHEMATIC DIAGRAM

11.3. SUB SCHEMATIC DIAGRAM

11.4. DRIVE SCHEMATIC DIAGRAM

11.5. MONIITOR & HALL SENSOR FLEX. CARD SCHEMATIC DIAGRAM

11.6. E.V.F. (A)/(B) SCHEMATIC DIAGRAM

11.7. MIC UNIT SCHEMATIC DIAGRAM

11.8. MENU OP./AE MENU OP. UNIT SCHEMATIC DIAGRAM

11.9. HEAD AMP SCHEMATIC DIAGRAM

11.10. CCD FLEX. CARD SCHEMATIC DIAGRAM

11.11. SIDE JACK SCHEMATIC DIAGRAM

11.12. TOP OP. FLEX. SCHEMATIC DIAGRAM

11.13. REAR OP. SCHEMATIC DIAGRAM

11.14. REAR JACK FLEX. SCHEMATIC DIAGRAM

12. CIRCUIT BOARD ASSEMBLIES

12.1. SUB C.B.A. (VEP01852A)

12.2. DRIVE C.B.A. (VEP02571A)

12.3. MIC UNIT (VEK8817)

12.4. REAR OPERATION C.B.A. (VEP06D13A)

12.5. MONITOR C.B.A. (VEP26228A)

12.6. HEAD AMP C.B.A. (VEP05352A)

12.7. SIDE JACK C.B.A. (VEP06D12A)

12.8. E.V.F. (A) C.B.A. (VEP28267A)

12.9. E.V.F. (B) C.B.A. (VEP28268A)

12.10. CCD FLEX. CARD C.B.A.(VEP22292A)

12.11. MENU OPERATION C.B.A. (VEP06D35A)

13. EXPLODED VIEWS

13.1. FRAME & CASING SECTION (1)

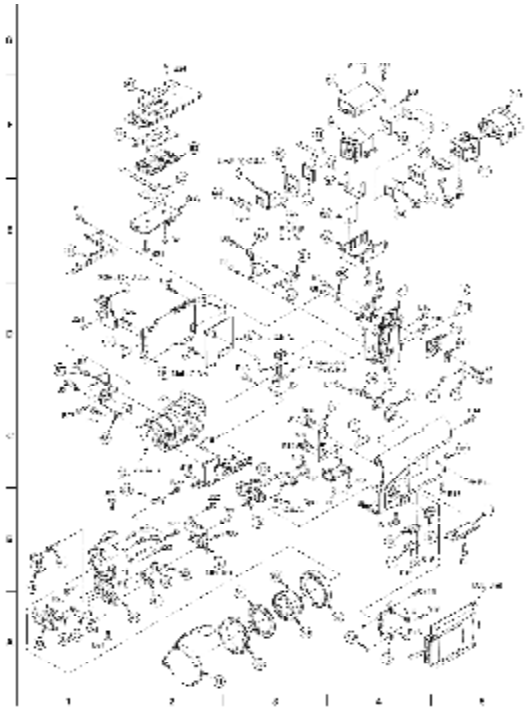

13.2. FRAME & CASING SECTION (2)

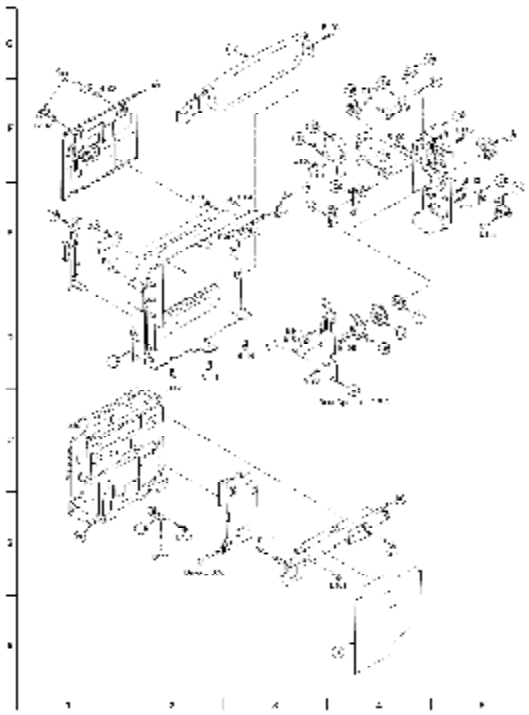

13.3. LCD SECTION

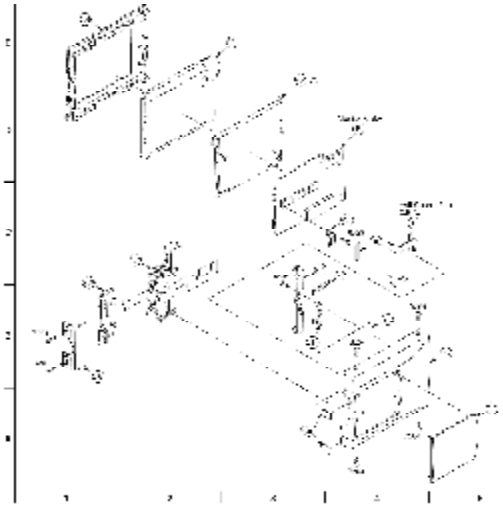

13.4. CAMERA LENS SECTION

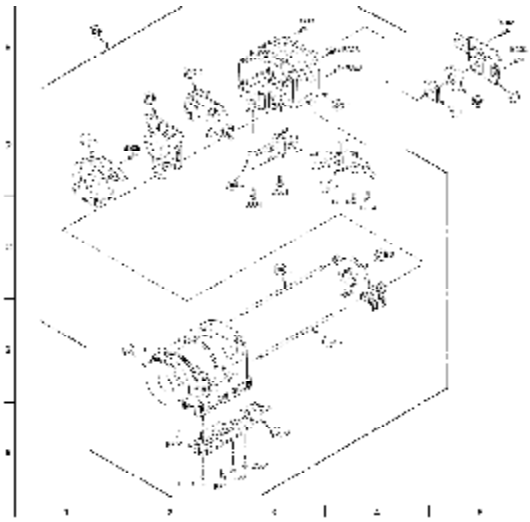

13.5. VCR MECHANISM SECTION (1)

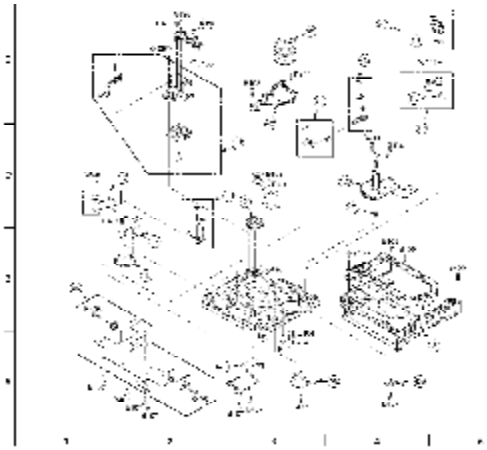

13.6. VCR MECHANISM SECTION (2)

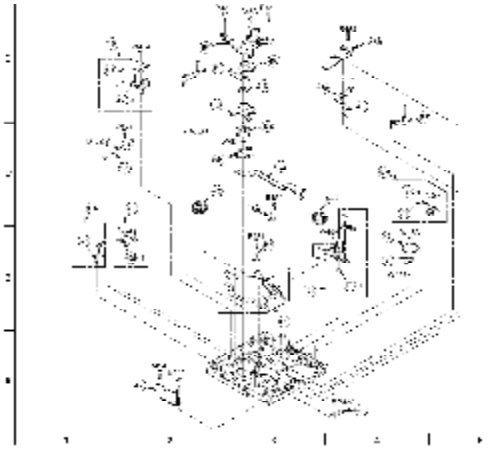

13.7. PACKING PARTS & ACCESSORIES SECTION

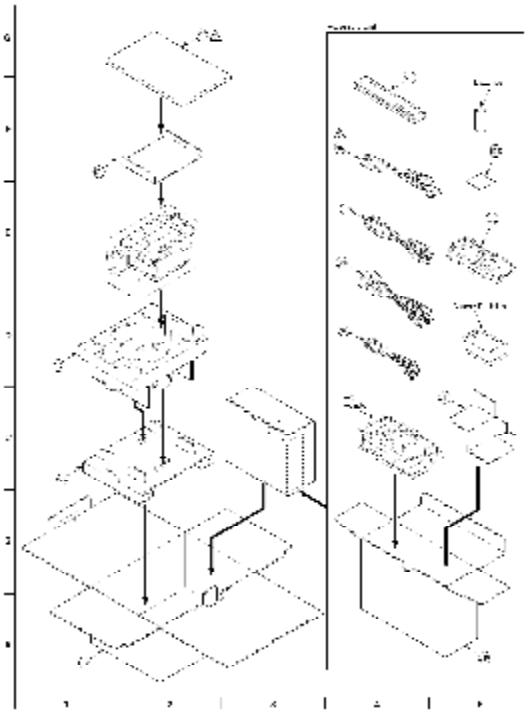

14. REPLACEMENT PARTS LIST

14.1. FRAME & CASING SECTION (1) PARTS LIST

Note: 1. *Be sure to make your orders of replacement parts according to this list.
2. IMPORTANT SAFETY NOTICE
Components identified with the mark △ have the special characteristics for safety. When replacing any of these components, use only the same type.

Ref. No.	Part No.	Part Name & Description	Pcs	Remarks
1 (1)	VKF3125	EVR COVER	1	
2 (1)	VJB04745	FRONT FLEX.	1	
3 (1)	VWJ14C8053AA	REAR OP. FLEX.	1	
4 (1)	VMD3711	TRIPOD FRAME	1	
5 (1)	VGQ2839	FLEX. SHEET	1	
6 (1)	VGQ5063	LCD LOCK COVER	1	
7 (1)	VGQ5096	STAND PIECE	1	
8 (1)	VGU8265	AE DIAL PIECE	1	
9 (1)	VMP5750	LCD FIXING ANGLE	1	
10 (1)	VMP5751	CAMERA FRAME	1	
11 (1)	VMP5753	TOP FRAME	1	
12 (1)	VYK7758	STAND ARM U.	1	
13 (1)	VEK8633	SPEAKER U.	1	
14 (1)	VMC1390	SPEAKER FIXING SPRING	1	
15 (1)	VMG1106	SPEAKER PROTECT RUBBER	1	
16 (1)	VYK9131	SIDE CASE (R)(2) U.	1	
17 (1)	VGQ5442	LCD HINGE COVER	1	
18 (1)	VSQ1041	LCD ROTARY MAGNET	2	
19 (1)	VGQ4584	EVF ROTARY PIECE	1	
20 (1)	VGQ4585	EVF ROTARY HOLDER	2	
21 (1)	VGQ4675	EVF LOCK PIECE	1	
22 (1)	VMC1365	EVF ROTARY SPRING	1	
23 (1)	VYK9136	EVF CASE (UPPER) U.	1	
24 (1)	VGU7931	BATTERY LOCK KNOB	1	
25 (1)	VMB3270	BATTERY LOCK SPRING	1	
26 (1)	VMP6127	BATTERY LOCK PLATE	1	
27 (1)	VYK8600	EVF HOLD CASE (1) U.	1	
28 (1)	VGQ4586	EYE CAP HOLDER	1	
29 (1)	VGQ4588	KNOB GUIDE	1	
30 (1)	VGU7612	ADJ. KNOB	1	
31 (1)	VMG1246	EYE CAP	1	
32 (1)	VDL0737	EVF LENS	1	
33 (1)	VGQ4587	LENS HOLDER	1	
34 (1)	VGQ4737	EVF LENS SHEET	1	
35 (1)	VGQ4624	BARRIER	1	
36 (1)	VKM5281	EVF CASE (LOWER)	1	
37 (1)	VMP5464	EVF CASE ANGLE	1	
38 (1)	LCX024AKC	EVF LCD PANEL	1	
39 (1)	VGQ4736	EVF SHEET	1	
40 (1)	VGQ5444	B.L. HOLDER	1	
41 (1)	VGQ5445	LCD MASK	1	
42 (1)	VGQ5493	EVF PROTECT PANEL	1	
43 (1)	VJF1376	LCD HOLD PIECE	1	
44 (1)	VSC4665	LCD SHIELD CASE	1	
45 (1)	VEK8809	AE MENU OP. U.	1	
46 (1)	VGQ5446	DV COVER HINGE	1	
47 (1)	VGU8266	FOCUS BUTTON	1	
48 (1)	VKF3126	DV COVER	1	
49 (1)	VKM5266	FRONT CASE	1	
50 (1)	VKW2700	SENSOR WINDOW	1	
51 (1)	VMP6128	FRONT EARTH PLATE (A)	1	
52 (1)	VMP6141	FRONT EARTH PLATE (B)	1	
53 (1)	VDW0654	LENS HOOD	1	
54 (1)	VDW0655	HOOD SCREW	1	

Ref. No.	Part No.	Part Name & Description	Pcs	Remarks
55 (1)	VMG1268	LENS RUBBER RING	1	
56 (1)	VGL0854	TALLY PANEL LIGHT	1	
57 (1)	VGK2531	HOOD ACCESSORY	1	
58 (1)	VDW0659	FRONT SCREW	1	
59 (1)	VYQ1755	MIC NET U.	1	
60 (1)	VGQ5154	PROTECT SHEET	1	
61 (1)	VYF2632	HOOD CAP U.	1	
62 (1)	VEK8843	TOP OP. FLEX.	1	
63 (1)	VGU8295	TOP OP. BUTTON	1	
64 (1)	VKM5267	TOP CASE	1	
65 (1)	VMP6092	TOP OP. ANGLE	1	
66 (1)	VSC4943	TOP SHIELD PLATE	1	
67 (1)	VMG0952	SCREW RUBBER	2	
68 (1)	VMP6093	LENS FRAME	1	
B1 (1)	XQN16+BJ4FZ	SCREW	1	
B2 (1)	VHD1214	SCREW	1	
B3 (1)	VMS5604	SCREW	2	
B4 (1)	XQN2+BJ3	SCREW	1	
B5 (1)	VHD1127	SCREW	4	
B6 (1)	XQN16+CJ4	SCREW	2	
B7 (1)	XQN16+BJ3FN	SCREW	1	
B8 (1)	XQN16+BJ4FZ	SCREW	1	
B9 (1)	XQN16+BJ3FN	SCREW	2	
B10 (1)	XQN2+BJ5FZ	SCREW	2	
B11 (1)	XQN2+CJ6FZ	SCREW	2	
B12 (1)	XQN16+BJ4FZ	SCREW	2	
B13 (1)	XQN16+BJ5FZ	SCREW	1	
B14 (1)	XQN16+BQ4FN	SCREW	2	
B15 (1)	XQN16+B3FZ	SCREW	3	
B16 (1)	XQN16+B4FN	SCREW	4	
B17 (1)	XQN2+CJ3	SCREW	3	
B18 (1)	XQN2+CJ4	SCREW	2	
B19 (1)	XQN2+CJ6	SCREW	1	
B20 (1)	XQN2+C25	SCREW	2	
B21 (1)	XQN16+BJ4	SCREW	2	
B22 (1)	XQN2+BJ6FN	SCREW	8	
B23 (1)	XQN16+BJ4FN	SCREW	2	
B24 (1)	XQN16+B3FN	SCREW	5	
B25 (1)	XQN16+B3FZ	SCREW	2	
B26 (1)	XQN16+B5FN	SCREW	1	
B27 (1)	XQN2+BJ6FN	SCREW	2	

14.2. FRAME & CASING SECTION (2) PARTS SECTION

Ref. No.	Part No.	Part Name & Description	Pcs	Remarks
101 (2)	VGP4575	SCREW CAP	2	
102 (2)	VGQ5441	MECHA. FIXING PIECE	1	
103 (2)	VMZ2708	BARRIER	1	
104 (2)	VXA5933	MECHA. FIXING ANGLE U.	1	
105 (2)	VGQ5498	MECHA. ADJ. PIECE	1	
106 (2)	VKF3144	JACK COVER	1	
107 (2)	VMA0A33	BELT ANGLE	1	
108 (2)	VYC0813	GRIP BELT U.	1	
109 (2)	VYK9189	SIDE CASE (L)(1) U.	1	
110 (2)	VMB3148	CASSETTE COVER SPRING	1	
111 (2)	VMP5413	CASSETTE FIXING BASE	1	
112 (2)	VYK9191	CASSETTE COVER (1) U.	1	
113 (2)	VEK8565	ZOOM OP. U.	1	
114 (2)	VGL0806	VTR CHANGE PANEL LIGHT	1	
115 (2)	VGQ2839	BARRIER	2	
116 (2)	VGQ4272	S/S BUTTON PIECE	1	
117 (2)	VGQ4493	EJECT BUTTON HOLDER	1	
118 (2)	VGQ4494	S/S LEVER	1	
119 (2)	VGQ5012	PHOTO SHOT BUTTON HOLDER	1	
120 (2)	VGQ5145	BUTTON SPACER	1	
121 (2)	VGU7575	EJECT BUTTON	1	
122 (2)	VGU7577	S/S BUTTON	1	
123 (2)	VGU8296	PHOTO SHOT BUTTON	1	
124 (2)	VGU8338	VTR CHANGE BUTTON	1	
125 (2)	VKM5282	REAR CASE	1	
126 (2)	VMC1470	S/S CLICK SPRING	1	
127 (2)	VMP5748	DEW FIXING ANGLE	1	
128 (2)	VSC4816	REAR EARTH PLATE	1	
129 (2)	VEK8533	DEW SENSOR	1	
130 (2)	VXY1484	MECHA.	1	
B101 (2)	VHD0866	SCREW	3	
B102 (2)	VHD1100	SCREW	2	
B103 (2)	VHD0794	SCREW	1	
B104 (2)	XQN16+B4	SCREW	1	
B105 (2)	VHD1105	SCREW	1	
B106 (2)	XQN16+BJ5	SCREW	2	
B107 (2)	XQN16+B15	SCREW	1	
B108 (2)	XQN2+BJ4	SCREW	6	
B109 (2)	XQN16+BJ4FZ	SCREW	1	
B110 (2)	XQN16+BJ6FZ	SCREW	4	
B111 (2)	XQN16+B3FN	SCREW	1	
B112 (2)	XQN16+B3FZ	SCREW	2	
B113 (2)	XQN16+B5FN	SCREW	1	
B114 (2)	XQN16+B6FZ	SCREW	1	
B115 (2)	XQN16+CJ8FZ	SCREW	1	

14.3. LCD SECTION PARTS LIST

Ref. No.	Part No.	Part Name & Description	Pcs	Remarks
201 (3)	C0D25T2027VB	MONITOR LCD PANEL	1	
202 (3)	VEK8808	BACK LIGHT U.	1	<!>
203 (3)	VGQ2759	BARRIER	1	
204 (3)	VGQ4758	PROTECT SHEET	2	
205 (3)	VGQ5136	FLEX. FIXING PIECE	1	
206 (3)	VKM5279	LCD CASE (LOWER)	1	
207 (3)	VXD0308	LCD ROTARY HINGE (1) U.	1	
208 (3)	VGQ5443	HINGE COVER (UPPER)	1	
209 (3)	VGQ5497	HINGE COVER (LOWER)	1	
210 (3)	VGK2537	LCD ACCESSORY	1	
211 (3)	VGQ5004	LCD LOCK PIECE	1	
212 (3)	VKM5265	LCD CASE (UPPER)	1	
213 (3)	VMB3274	LOCK PIECE FIXING SPRING	1	
214 (3)	VMP5747	LOCK PIECE FIXING PLATE	1	
215 (3)	VMZ2974	LCD CASE (UPPER) BARRIER	1	
B201 (3)	XQN2+BF35	SCREW	2	
B202 (3)	XQS16+AJ3	SCREW	1	
B203 (3)	XQN16+BF3FN	SCREW	1	
B204 (3)	XQN16+B3FN	SCREW	4	

14.4. CAMERA LENS SECTION PARTS LIST

Ref. No.	Part No.	Part Name & Description	Pcs	Remarks
301 (4)	VDL0916	CRYSTAL FILTER	1	
302 (4)	VEK8844	CCD U.	1	
303 (4)	VMX2712	CCD CUSHION	1	
304 (4)	VXW0385	LENS U.	1	
304-1 (4)	VDW0528	MASTER FRANGE U.	1	
304-2 (4)	VEK8231	LENS FLEX. CARD C.B.A.	1	(RTL)
304-3 (4)	VEM0642	ZOOM MOTOR U.	1	
304-4 (4)	VEM0643	FOCUS MOTOR U.	1	
304-5 (4)	VMS6260	GUIDE POLE (A)	2	
304-6 (4)	VMS6423	GUIDE POLE (B)	2	
304-7 (4)	VXL2837	IRIS U.	1	
304-8 (4)	VXP1848	2ND MOVING FRAME U.	1	
304-9 (4)	VXP1849	4TH MOVING FRAME U.	1	
304-10(4)	VXQ0689	MAIN FRAME U.	1	
304-11(4)	VXQ0690	3RD LENS FRAME U.	1	
B301 (4)	VHD0852	SCREW	2	
B302 (4)	XQN16+CJ6	SCREW	2	
B303 (4)	XQN16+BJ8	SCREW	3	
B304 (4)	XQN16+BJ5	SCREW	8	
B305 (4)	VHD0852	SCREW	2	

14.5. VCR MECHANISM SECTION (1) PARTS LIST

Ref. No.	Part No.	Part Name & Description	Pcs	Remarks
401 (5)	VEG1438	CYLINDER UNIT	1	
402 (5)	VEM0624	CAPSTAN MOTOR UNIT	1	
403 (5)	VEP05352A	HEAD AMP C.B.A.	1	(RTL)
403-*(5)	VSC4639	HEAD AMP SHIELD CASE	1	
404 (5)	VES0856	FLEXIBLE CABLE	1	
405 (5)	VMA0D82	CAPSTAN COVER	1	
406 (5)	VMA9179	RADON PLATE	1	
407 (5)	VMD2373	RAIL	1	
408 (5)	VSC4640	SHIELD CASE	1	
409 (5)	VSR0114	MODE SW	1	
410 (5)	VXA5407	CAM GEAR UNIT	1	
411 (5)	VXA5409	S BOAT UNIT	1	
412 (5)	VXA5410	T BOAT UNIT	1	
413 (5)	VXA5417	GEAR BOX (LOADING MOTOR)	1	
414 (5)	VXA5612	RADON COVER UNIT	1	
415 (5)	VXL2461	T2 ARM UNIT	1	
415-1(5)	VMB2789	T2 ARM SPRING	1	
416 (5)	VXL2468	CLEANING ARM UNIT	1	
416-1(5)	VMB2791	CLEANING ARM SPRING	1	
417 (5)	VXL2470	S1 ARM UNIT	1	
418 (5)	VXL2471	T1 ARM UNIT	1	
419 (5)	VMA9753	BRUSH ARM STOPPER	1	
420 (5)	VMB2777	CAPSTAN ADJ. SPRING	1	
421 (5)	VXA5387	GARAGE UNIT	1	
B401 (5)	VHD0878	SCREW	1	
B402 (5)	VHD0989	SCREW	2	
B403 (5)	XQN14+B4	SCREW	2	
B404 (5)	XQN14+B2	SCREW	3	
B405 (5)	XQN14+B35	SCREW	2	
B406 (5)	XQN14+BQ4	SCREW	2	
B407 (5)	XQN14+B15	SCREW	8	
B409 (5)	VHD0882	SCREW	6	
B410 (5)	XQN14+B4FZ	SCREW	1	
W401 (5)	VMX2027	WASHER	2	

14.6. VCR MECHANISM SECTION (2) PARTS LIST

Ref. No.	Part No.	Part Name & Description	Pcs	Remarks
451 (6)	VDG1030	DRIVE PULLEY	1	
452 (6)	VDG1031	CENTER PULLEY	1	
453 (6)	VDG1032	SENSOR GEAR	1	
454 (6)	VDV0265	TIMING BELT	1	
455 (6)	VMA9178	PINCH PRESSURE PLATE	1	
457 (6)	VMA9181	BRAKE ROD SUPPORT (T)	1	
458 (6)	VMB2776	SPRING	1	
459 (6)	VSH0067	MIC SWITCH	1	
460 (6)	VSJ0114	SOLENOID	1	
461 (6)	VXA5401	BRAKE ROD UNIT	1	
462 (6)	VXA5408	T3 ROD UNIT	1	
463 (6)	VXA5411	LED HOLDER UNIT	1	
464 (6)	VXA5412	COVER PLATE UNIT	1	
465 (6)	VXL2454	P IDLER ARM UNIT	1	
466 (6)	VXL2455	FR IDLER ARM UNIT	1	
467 (6)	VXL2456	TENSION ARM UNIT	1	
468 (6)	VXL2732	PAD ARM UNIT	1	
468-1(6)	VMB2788	TENSION SPRING	1	
468-2(6)	VMB2787	PAD ARM SPRING	1	
469 (6)	VXL2462	T3 ARM UNIT	1	
470 (6)	VXL2464	PINCH ARM UNIT	1	
471 (6)	VXL2466	EJECT ARM UNIT	1	
472 (6)	VXR0355	SUPPLY REEL TABLE	1	
473 (6)	VXR0356	TAKE UP REEL TABLE	1	
474 (6)	VXZ0319	TAKE UP MAIN BRAKE	1	
474-1(6)	VMB2782	T MAIN BRAKE SPRING	1	
475 (6)	VXZ0321	SUPPLY MAIN BRAKE	1	
475-1(6)	VMB2783	S MAIN BRAKE SPRING	1	
476 (6)	VXZ0322	FF BRAKE UNIT	1	
476-1(6)	VMB2784	FF BRAKE SPRING	1	
477 (6)	VXZ0323	REV BRAKE UNIT	1	
477-1(6)	VMB2786	REV SPRING	1	
477-2(6)	VMB2785	REV BRAKE SPRING	1	
B451 (6)	VHD0884	SCREW	1	
B452 (6)	XQN14+B15	SCREW	2	
B453 (6)	VHD0883	SCREW	5	
B454 (6)	XQN14+B35	SCREW	3	
W451 (6)	VMX2503	WASHER	1	
W452 (6)	VMX2400	WASHER	1	
W453 (6)	VMX2504	WASHER	1	
W454 (6)	VMX2027	WASHER	1	
W455 (6)	VMX2028	WASHER	1	
W456 (6)	VMX2394	WASHER	1	

14.7. PACKING PARTS & ACCESSORIES SECTION PARTS LIST

Ref. No.	Part No.	Part Name & Description	Pcs	Remarks
501 (7)	VPN4824	PAD	1	
502 (7)	VQT8231	OPERATING INSTRUCTIONS	1	NV-DS11EG <!>
		(GERMAN/FRENCH/DUTCH/		
		DANISH)		
502 (7)	VQT8233	OPERATING INSTRUCTIONS	1	NV-DS11B <!>
		(ENGLISH)		
502 (7)	VQT8232	OPERATING INSTRUCTIONS	1	NV-DS11E <!>
		(ITALIAN/SWEDISH/ENGLISH/		
		SPANISH)		
503 (7)	VEQ2301	REMOTE CONTROLLER U.	1	
504 (7)	VFC1792	CLEANER TISSUE	1	
505 (7)	VFC2522	SHOULDER STRAP	1	
506 (7)	VJA0658	S-VIDEO CABLE	1	
507 (7)	VJA0664	AC CORD	1	NV-DS11EG/E <!>
507 (7)	VJA0940	AC CORD	1	NV-DS11B <!>
508 (7)	VJA1028	AV CORD	1	
509 (7)	VJA1088	DC CABLE	1	
510 (7)	VPN4965	ACCESSORIES PACKING	1	
511 (7)	VPN5256	PAD	1	
512 (7)	VPK2272	PACKING	1	NV-DS11EG
512 (7)	VPK2274	PACKING	1	NV-DS11B
512 (7)	VPK2273	PACKING	1	NV-DS11E
513 (7)	VPN4967	CUSHION (UPPER)	1	
514 (7)	VPN4968	CUSHION (LOWER)	1	
.		****** JIG & TOOLS ******		
.	VFA0272	232C (M3) I/F CABLE	1	
.	VFK1308E	MEASURING BOARD	1	
.	VFK1309EX	CONNECTION ADAPTOR	1	
.	VFK1309	EVR CONNECTION BOARD	1	
.	VFK1317	FLAT CABLE 30P	2	
.	VJA0941	DC OUTPUT CABLE	1	FOR AC ADAPTOR
.	VFM3110EDS	ALIGNMENT TAPE	1	
.	VFK1367	FLAT CABLE 50P	1	
.	VFK1284	FLAT CABLE 24P	1	
.	VFK1292	FLAT CABLE 9P	1	
.	VFK1282	FLAT CABLE 22P	1	
.	VFK1174	FLAT CABLE 30P	1	
.	VFK1364	FLAT CABLE 14P	1	
.	VFK1441	FLAT CABLE 8P	1	
.	VFK1545	FLAT CABLE 100P	1	
.	VFK1456	FLAT CABLE 17P	1	
.	VFK1452	FLAT CABLE 17P	1	
.	VFK1460	FLAT CABLE 20P	1	
.	VFK1443	FLAT CABLE 18P	3	

14.8. ELECTRICAL REPLACEMENT PARTS LIST

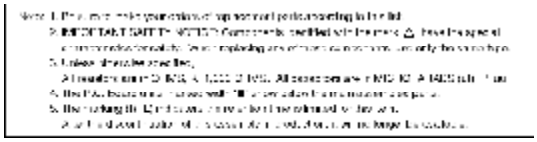

Ref. No.	Part No.	Part Name & Description	Pcs	Remarks
■	VEP03F09A	VTR MAIN C.B.A.	1	(RTL)
■	VEP01852A	SUB C.B.A.	1	(RTL)
■	VEP26228A	MONITOR C.B.A.	1	(RTL)
■	VEK8817	MIC UNIT	1	
■	VEP28267A	E.V.F.(A) C.B.A.	1	(RTL)
■	VEP28268A	E.V.F.(B) C.B.A.	1	(RTL)
■	VEP02571A	DRIVE C.B.A.	1	(RTL)
■	VEP06D12A	SIDE JACK C.B.A.	1	(RTL)
■	VEP06D13A	REAR OPERATION C.B.A.	1	(RTL)
■	VEP22292A	CCD FLEX.CARD C.B.A.	1	(RTL)
■	VEP06D14A	REAR JACK C.B.A.	1	(RTL)
■	VEP06C60A	SENSOR FLEX. CARD	1	(RTL)
■	VEP06D35A	MENU OPERATION C.B.A.	1	(RTL)
■	VEK8231	LENS FLEX.CARD C.B.A.	1	(RTL)
■	VEP05352A	HEAD AMP C.B.A.	1	(RTL)
■	VEP01852A	SUB C.B.A.		(RTL)
C1001	ECUM1C106VBP	C.CAPACITOR CH 16V 10U	1	
C1002	ECUM1C106VBP	C.CAPACITOR CH 16V 10U	1	
C1003	ECUM1C106VBP	C.CAPACITOR CH 16V 10U	1	
C1004	ECUM1C106VBP	C.CAPACITOR CH 16V 10U	1	
C1005	ECUM1A335KBN	C.CAPACITOR CH 10V 3.3U	1	
C1011	ECUX1A104KBQ	C.CAPACITOR CH 10V 0.1U	1	
C1012	ECUM1A335KBN	C.CAPACITOR CH 10V 3.3U	1	
C1013	ECUX1E331KBQ	C.CAPACITOR CH 25V 330P	1	
C1014	ECUX1C223KBQ	C.CAPACITOR CH 16V 0.022U	1	
C1016	ECUM1A105KBN	C.CAPACITOR CH 10V 1U	1	
C1018	ECUM1A105KBN	C.CAPACITOR CH 10V 1U	1	
C1019	ECUM1A105KBN	C.CAPACITOR CH 10V 1U	1	
C1021	ECUX1A104KBQ	C.CAPACITOR CH 10V 0.1U	1	
C1022	ECUM1A335KBN	C.CAPACITOR CH 10V 3.3U	1	
C1023	ECUX1E331KBQ	C.CAPACITOR CH 25V 330P	1	
C1024	ECUX1C223KBQ	C.CAPACITOR CH 16V 0.022U	1	
C1025	ECST0JY106Z	T.CAPACITOR CH 6.3V 10U	1	
C1026	ECUM1A105KBN	C.CAPACITOR CH 10V 1U	1	
C1027	ECUM1A105KBN	C.CAPACITOR CH 10V 1U	1	
C1029	ECUM1A105KBN	C.CAPACITOR CH 10V 1U	1	
C1031	ECUX1A104KBQ	C.CAPACITOR CH 10V 0.1U	1	
C1032	ECUM1A335KBN	C.CAPACITOR CH 10V 3.3U	1	
C1033	ECUX1E222KBQ	C.CAPACITOR CH 25V 2200P	1	
C1036	ECUM1A105KBN	C.CAPACITOR CH 10V 1U	1	
C1041	ECUX1A104KBQ	C.CAPACITOR CH 10V 0.1U	1	
C1042	ECUM1A335KBN	C.CAPACITOR CH 10V 3.3U	1	
C1043	ECUX1E331KBQ	C.CAPACITOR CH 25V 330P	1	
C1044	ECUX1C223KBQ	C.CAPACITOR CH 16V 0.022U	1	
C1045	ECST0JY106Z	T.CAPACITOR CH 6.3V 10U	1	

Ref. No.	Part No.	Part Name & Description	Pcs	Remarks
C1046	ECUM1A105KBN	C.CAPACITOR CH 10V 1U	1	
C1052	ECUM1E105KBM	C.CAPACITOR CH 25V 1U	1	
C1053	ECUX1E222KBQ	C.CAPACITOR CH 25V 2200P	1	
C1055	ECUM1C106VBP	C.CAPACITOR CH 16V 10U	1	
C1056	ECUM1E105KBM	C.CAPACITOR CH 25V 1U	1	
C1057	ECUM1E105KBM	C.CAPACITOR CH 25V 1U	1	
C1085	ECUM1C106VBP	C.CAPACITOR CH 16V 10U	1	
C1086	ECUM1E105KBM	C.CAPACITOR CH 25V 1U	1	
C1087	ECUM1E105KBM	C.CAPACITOR CH 25V 1U	1	
C1101	ECUX1H101JCQ	C.CAPACITOR CH 50V 100P	1	
C1102	ECUX1A334KBV	C.CAPACITOR CH 10V 0.33U	1	
C1103	ECUX1A473KBQ	C.CAPACITOR CH 10V 0.047U	1	
C1104	ECUX1A104KBQ	C.CAPACITOR CH 10V 0.1U	1	
C1105	ECUM1A105KBN	C.CAPACITOR CH 10V 1U	1	
C1106	ECUX1A104KBQ	C.CAPACITOR CH 10V 0.1U	1	
C1107	ECUM1A105KBN	C.CAPACITOR CH 10V 1U	1	
C1108	ECUX1A104KBQ	C.CAPACITOR CH 10V 0.1U	1	
C1111	ECUX1H222KBV	C.CAPACITOR CH 50V 2200P	1	
C1112	ECUX1E471KBQ	C.CAPACITOR CH 25V 470P	1	
C1113	ECUX1H151JCQ	C.CAPACITOR CH 50V 150P	1	
C1114	ECUX1H390JCQ	C.CAPACITOR CH 50V 39P	1	
C1117	ECUM1A105KBN	C.CAPACITOR CH 10V 1U	1	
C1118	ECST0JY106Z	T.CAPACITOR CH 6.3V 10U	1	
C1119	ECUM1A105KBN	C.CAPACITOR CH 10V 1U	1	
C1121	ECUX1H472KBV	C.CAPACITOR CH 50V 4700P	1	
C1122	ECUX1E471KBQ	C.CAPACITOR CH 25V 470P	1	
C1123	ECUX1H151JCQ	C.CAPACITOR CH 50V 150P	1	
C1124	ECUX1H390JCQ	C.CAPACITOR CH 50V 39P	1	
C1125	ECUM1A105KBN	C.CAPACITOR CH 10V 1U	1	
C1127	ECUM1A105KBN	C.CAPACITOR CH 10V 1U	1	
C1128	ECUM1A105KBN	C.CAPACITOR CH 10V 1U	1	
C1129	ECUM1A105KBN	C.CAPACITOR CH 10V 1U	1	
C1131	ECUX1C473KBV	C.CAPACITOR CH 16V 0.047U	1	
C1132	ECUX1E471KBQ	C.CAPACITOR CH 25V 470P	1	
C1133	ECUX1H151JCQ	C.CAPACITOR CH 50V 150P	1	
C1134	ECUX1H390JCQ	C.CAPACITOR CH 50V 39P	1	
C1141	ECUX1C104KBV	C.CAPACITOR CH 16V 0.1U	1	
C1142	ECUX1H471JCV	C.CAPACITOR CH 50V 470P	1	
C1143	ECUX1H151JCQ	C.CAPACITOR CH 50V 150P	1	
C1144	ECUX1H390JCQ	C.CAPACITOR CH 50V 39P	1	
C1150	ECUM1A105KBN	C.CAPACITOR CH 10V 1U	1	
C1151	ECUX1H822KBV	C.CAPACITOR CH 50V 8200P	1	
C1152	ECUX1C822KBQ	C.CAPACITOR CH 16V 8200P	1	
C1153	ECUX1H151JCQ	C.CAPACITOR CH 50V 150P	1	
C1154	ECUX1H820JCQ	C.CAPACITOR CH 50V 82P	1	
C1155	ECUM0J225KBN	C.CAPACITOR CH 6.3V 2.2U	1	
C1156	ECST0JY106Z	T.CAPACITOR CH 6.3V 10U	1	
C1301	ECUM1A105KBN	C.CAPACITOR CH 10V 1U	1	
D1051	SB05-05CP	DIODE	1	
D1052	1SS355	DIODE	1	
D1082	1SS355	DIODE	1	
D1101	MA8120-L	DIODE	1	
D1151	MA8160-M	DIODE	1	
D1152	1SS355	DIODE	1	

Ref. No.	Part No.	Part Name & Description	Pcs	Remarks
D1301	RB520S30	DIODE	1	
FL1001	VLF1378	FILTER	1	
FL1401	VLF1469A206	FILTER	1	
FL1402	VLF1376A256	FILTER	1	
FP1001	VJS4273B018	CONNECTOR (FEMALE) 18P	1	
FP1003	VJS3498A008	CONNECTOR (FEMALE) 8P	1	
FP1004	VJS3320B010	CONNECTOR (FEMALE) 10P	1	
FP1201	VJS3319B017	CONNECTOR (FEMALE) 17P	1	
IC1001	BA9734AKV	IC	1	
IC1002	NJM2406F	IC	1	
IP1001	VSF0233F31	FUSE	1	<!>
L1001	VLQ0827M3R9	COIL 3.9UH	1	
L1011	VLQ0827M470	COIL 47UH	1	
L1012	VLQ0888M4R7	COIL 4.7UH	1	
L1014	VLQ0888K100	COIL 10UH	1	
L1015	VLQ0888K100	COIL 10UH	1	
L1016	VLQ0888K100	COIL 10UH	1	
L1017	VLQ0464K100	COIL 10UH	1	
L1021	VLQ0827M150	COIL 15UH	1	
L1022	VLQ0827M4R7	COIL 4.7UH	1	
L1023	VLQ0888M4R7	COIL 4.7UH	1	
L1025	VLQ0780K100	COIL 10UH	1	
L1026	VLQ0888K100	COIL 10UH	1	
L1027	VLQ0888K100	COIL 10UH	1	
L1028	VLQ0888K100	COIL 10UH	1	
L1029	VLQ0888K100	COIL 10UH	1	
L1031	VLQ0827M121	COIL 120UH	1	
L1033	VLQ0888M4R7	COIL 4.7UH	1	
L1041	VLQ0827M220	COIL 22UH	1	
L1042	VLQ0827M4R7	COIL 4.7UH	1	
L1051	VLQ0888K221	COIL 220UH	1	
L1052	VLQ0780K100	COIL 10UH	1	
L1081	VLQ0888K221	COIL 220UH	1	
L1082	VLQ0780K100	COIL 10UH	1	
L1301	VLQ0807K220	COIL 22UH	1	
P1002	VJP4002B002P	CONNECTOR (MALE) 2P	1	
PP1001	VJP4143A100	CONNECTOR (MALE) 100P	1	
Q1011	FP102	TRANSISTOR	1	
Q1021	FP102	TRANSISTOR	1	
Q1022	2SK2151	TRANSISTOR	1	
Q1031	FP102	TRANSISTOR	1	
Q1041	FP102	TRANSISTOR	1	
Q1042	2SK2151	TRANSISTOR	1	
Q1051	2SB798A	TRANSISTOR	1	
Q1052	2SB1218A-R	TRANSISTOR	1	
Q1053	2SD1819A	TRANSISTOR	1	
Q1054	XP1401	TRANSISTOR-TRANSISTOR	1	
Q1055	2SD2216	TRANSISTOR	1	
Q1056	2SB1462-R	TRANSISTOR	1	
Q1083	2SD1819A	TRANSISTOR	1	
Q1084	XP1401	TRANSISTOR-TRANSISTOR	1	
Q1101	2SB1462-R	TRANSISTOR	1	
Q1301	2SB1218A-R	TRANSISTOR	1	
Q1302	2SB1218A-R	TRANSISTOR	1	

Ref. No.	Part No.	Part Name & Description	Pcs	Remarks
Q1303	2SB1218A-R	TRANSISTOR	1	
Q1304	XP1501	TRANSISTOR-TRANSISTOR	1	
QR1001	UN9111J	TRANSISTOR-RESISTOR	1	
QR1004	UN9115	TRANSISTOR-RESISTOR	1	
QR1050	UN9213	TRANSISTOR-RESISTOR	1	
QR1051	UN9113J	TRANSISTOR-RESISTOR	1	
QR1081	UN9113J	TRANSISTOR-RESISTOR	1	
QR1101	UN9214J	TRANSISTOR-RESISTOR	1	
QR1301	UN9212	TRANSISTOR-RESISTOR	1	
QR1302	XP4314	TRANSISTOR	1	
R1001	ERJ3GEY0R00	M.RESISTOR CH 1/16W 0	1	
R1003	ERJ2GEJ225	M.RESISTOR CH 1/16W 2.2M	1	
R1005	ERJ2GEJ103	M.RESISTOR CH 1/16W 10K	1	
R1007	ERJ8GEY0R00	M.RESISTOR CH 1/8W 0	1	
R1008	ERJ2GEJ473	M.RESISTOR CH 1/16W 47K	1	
R1009	ERJ8GEY0R00	M.RESISTOR CH 1/8W 0	1	
R1010	ERJ2RKD820	M.RESISTOR CH 1/16W 82	1	
R1011	ERJ6RBB682	M.RESISTOR CH 1/10W 6.8K	1	
R1012	ERJ2RKD820	M.RESISTOR CH 1/16W 82	1	
R1013	ERJ3RBD391	M.RESISTOR CH 1/16W 390	1	
R1014	ERJ6RBB272	M.RESISTOR CH 1/10W 2.7K	1	
R1015	ERJ2GEJ331	M.RESISTOR CH 1/16W 330	1	
R1020	ERJ2RKD820	M.RESISTOR CH 1/16W 82	1	
R1021	ERJ6RBB272	M.RESISTOR CH 1/10W 2.7K	1	
R1022	ERJ2RKD820	M.RESISTOR CH 1/16W 82	1	
R1023	ERJ3RBD361	M.RESISTOR CH 1/16W 360	1	
R1024	ERJ6RBB272	M.RESISTOR CH 1/10W 2.7K	1	
R1025	ERJ2GEJ331	M.RESISTOR CH 1/16W 330	1	
R1030	ERJ2GEJ820	M.RESISTOR CH 1/16W 82	1	
R1031	ERJ6RBB332	M.RESISTOR CH 1/10W 3.3K	1	
R1032	ERJ2GEJ820	M.RESISTOR CH 1/16W 82	1	
R1033	ERJ3RBD331	M.RESISTOR CH 1/16W 330	1	
R1034	ERJ6RBB272	M.RESISTOR CH 1/10W 2.7K	1	
R1040	ERJ2RKD820	M.RESISTOR CH 1/16W 82	1	
R1041	ERJ6RBB152	M.RESISTOR CH 1/10W 1.5K	1	
R1042	ERJ2RKD820	M.RESISTOR CH 1/16W 82	1	
R1043	ERJ3RBD511	M.RESISTOR CH 1/16W 510	1	
R1044	ERJ6RBB272	M.RESISTOR CH 1/10W 2.7K	1	
R1045	ERJ2GEJ331	M.RESISTOR CH 1/16W 330	1	
R1050	ERJ2RKD820	M.RESISTOR CH 1/16W 82	1	
R1051	ERJ6RBB273	M.RESISTOR CH 1/10W 27K	1	
R1052	ERJ2RKD820	M.RESISTOR CH 1/16W 82	1	
R1053	ERJ3RBD271	M.RESISTOR CH 1/16W 270	1	
R1054	ERJ6RBB272	M.RESISTOR CH 1/10W 2.7K	1	
R1057	ERJ2RHD113	M.RESISTOR CH 1/16W 11K	1	
R1058	ERJ2RHD561	M.RESISTOR CH 1/16W 560	1	
R1059	ERJ2RHD272	M.RESISTOR CH 1/16W 2.7K	1	
R1087	ERJ2RHD223	M.RESISTOR CH 1/16W 22K	1	
R1088	ERJ2RHD332	M.RESISTOR CH 1/16W 3.3K	1	
R1089	ERJ2RHD272	M.RESISTOR CH 1/16W 2.7K	1	
R1101	ERJ2RHD223	M.RESISTOR CH 1/16W 22K	1	
R1102	ERJ2GEJ472	M.RESISTOR CH 1/16W 4.7K	1	
R1103	ERJ2GEJ472	M.RESISTOR CH 1/16W 4.7K	1	
R1104	ERJ2GEJ123	M.RESISTOR CH 1/16W 12K	1	

Ref. No.	Part No.	Part Name & Description	Pcs	Remarks
R1107	ERJ2GEJ225	M.RESISTOR CH 1/16W 2.2M	1	
R1108	ERJ2GEJ473	M.RESISTOR CH 1/16W 47K	1	
R1109	ERJ2GEJ103	M.RESISTOR CH 1/16W 10K	1	
R1111	ERJ2GEJ151	M.RESISTOR CH 1/16W 150	1	
R1112	ERJ2GEJ822	M.RESISTOR CH 1/16W 8.2K	1	
R1121	ERJ2GEJ151	M.RESISTOR CH 1/16W 150	1	
R1122	ERJ2GEJ682	M.RESISTOR CH 1/16W 6.8K	1	
R1131	ERJ2GEJ151	M.RESISTOR CH 1/16W 150	1	
R1132	ERJ2GEJ822	M.RESISTOR CH 1/16W 8.2K	1	
R1141	ERJ2GEJ151	M.RESISTOR CH 1/16W 150	1	
R1142	ERJ2GEJ103	M.RESISTOR CH 1/16W 10K	1	
R1151	ERJ2GEJ151	M.RESISTOR CH 1/16W 150	1	
R1152	ERJ2GEJ822	M.RESISTOR CH 1/16W 8.2K	1	
R1153	ERJ2RHD123	M.RESISTOR CH 1/16W 12K	1	
R1154	ERJ2RHD473	M.RESISTOR CH 1/16W 47K	1	
R1155	ERJ2GEJ103	M.RESISTOR CH 1/16W 10K	1	
R1156	ERJ2GEJ332	M.RESISTOR CH 1/16W 3.3K	1	
R1157	ERJ2GEJ272	M.RESISTOR CH 1/16W 2.7K	1	
R1186	ERJ2GEJ332	M.RESISTOR CH 1/16W 3.3K	1	
R1187	ERJ2GEJ272	M.RESISTOR CH 1/16W 2.7K	1	
R1250	ERJ3GEY0R00	M.RESISTOR CH 1/16W 0	1	
R1251	ERJ2GEJ683	M.RESISTOR CH 1/16W 68K	1	
R1252	ERJ2GEJ473	M.RESISTOR CH 1/16W 47K	1	
R1253	ERJ2GEJ473	M.RESISTOR CH 1/16W 47K	1	
R1254	ERJ2GEJ473	M.RESISTOR CH 1/16W 47K	1	
R1255	ERJ2GEJ473	M.RESISTOR CH 1/16W 47K	1	
R1256	ERJ2GEJ473	M.RESISTOR CH 1/16W 47K	1	
R1301	ERJ2GEJ203	M.RESISTOR CH 1/16W 20K	1	
R1302	ERJ2GEJ222	M.RESISTOR CH 1/16W 2.2K	1	
R1303	ERJ2GEJ473	M.RESISTOR CH 1/16W 47K	1	
R1304	ERJ2GEJ102	M.RESISTOR CH 1/16W 1K	1	
R1305	ERJ2GEJ332	M.RESISTOR CH 1/16W 3.3K	1	
R1306	ERJ2GEJ183	M.RESISTOR CH 1/16W 18K	1	
R1307	ERJ2RHD103	M.RESISTOR CH 1/16W 10K	1	
R1308	ERJ2RHD222	M.RESISTOR CH 1/16W 2.2K	1	
R1309	ERJ2RHD153	M.RESISTOR CH 1/16W 15K	1	
R1401	ERJ2GEJ101	M.RESISTOR CH 1/16W 100	1	
R1402	ERJ2GEJ101	M.RESISTOR CH 1/16W 100	1	
R1403	ERJ2GE0R00	M.RESISTOR CH 1/16W 0	1	
R1404	ERJ2GE0R00	M.RESISTOR CH 1/16W 0	1	
R1405	ERJ6GEY0R00	M.RESISTOR CH 1/10W 0	1	
T1051	VTP0524	TRANSFORMER	1	
■	VEP26228A	MONITOR C.B.A.		(RTL)
C902	ECUM1A105KBN	C.CAPACITOR CH 10V 1U	1	
C903	ECUX1E471KBQ	C.CAPACITOR CH 25V 470P	1	
C904	ECUX1H150JCQ	C.CAPACITOR CH 50V 15P	1	
C905	ECUX1C104KBV	C.CAPACITOR CH 16V 0.1U	1	
C906	ECUX1E561KBQ	C.CAPACITOR CH 25V 560P	1	
C907	ECUX1C104KBV	C.CAPACITOR CH 16V 0.1U	1	
C908	ECUX1C104KBV	C.CAPACITOR CH 16V 0.1U	1	
C909	ECST0JY106Z	T.CAPACITOR CH 6.3V 10U	1	

[illegible]	[illegible]	[illegible]	[illegible]	

Ref. No.	Part No.	Part Name & Description	Pcs	Remarks
C910	ECUM1A105KBN	C.CAPACITOR CH 10V 1U	1	
C911	ECUX1E222KBQ	C.CAPACITOR CH 25V 2200P	1	
C912	ECST0JY106Z	T.CAPACITOR CH 6.3V 10U	1	
C913	ECUM1A105KBN	C.CAPACITOR CH 10V 1U	1	
C914	ECUX1E102KBQ	C.CAPACITOR CH 25V 1000P	1	
C915	ECUM1A106VBM	C.CAPACITOR CH 10V 10U	1	
C916	ECST0JY106Z	T.CAPACITOR CH 6.3V 10U	1	
C917	ECUM1A105KBN	C.CAPACITOR CH 10V 1U	1	
C918	ECST1VX225Z	T.CAPACITOR CH 35V 2.2U	1	
C919	ECUX1A334KBV	C.CAPACITOR CH 10V 0.33U	1	
C920	ECST1AY475Z	T.CAPACITOR CH 10V 4.7U	1	
C922	ECUX1C104KBV	C.CAPACITOR CH 16V 0.1U	1	
C923	ECUX1C104KBV	C.CAPACITOR CH 16V 0.1U	1	
C924	ECUX1C104KBV	C.CAPACITOR CH 16V 0.1U	1	
C925	ECUX1C104KBV	C.CAPACITOR CH 16V 0.1U	1	
C926	ECUX1C104KBV	C.CAPACITOR CH 16V 0.1U	1	
C927	ECUX1C104KBV	C.CAPACITOR CH 16V 0.1U	1	
C928	ECST0JY106Z	T.CAPACITOR CH 6.3V 10U	1	
C930	ECUX1E471KBQ	C.CAPACITOR CH 25V 470P	1	
C931	ECUX1E471KBQ	C.CAPACITOR CH 25V 470P	1	
C932	ECUX1E471KBQ	C.CAPACITOR CH 25V 470P	1	
C933	ECUX1E471KBQ	C.CAPACITOR CH 25V 470P	1	
C936	ECUX1A105VBV	C.CAPACITOR CH 10V 1U	1	
C937	ECUX1A104KBQ	C.CAPACITOR CH 10V 0.1U	1	
C938	ECUX1H101JCQ	C.CAPACITOR CH 50V 100P	1	
C939	ECUX1H331JCV	C.CAPACITOR CH 50V 330P	1	
C940	ECUX1H560JCQ	C.CAPACITOR CH 50V 56P	1	
C941	ECUX1H100CCQ	C.CAPACITOR CH 50V 10P	1	
C942	ECUM1C474KBN	C.CAPACITOR CH 16V 0.47U	1	
C943	ECUX1A224KBV	C.CAPACITOR CH 10V 0.22U	1	
C944	ECUX1A224KBV	C.CAPACITOR CH 10V 0.22U	1	
C945	ECUX1E332KBQ	C.CAPACITOR CH 25V 3300P	1	
C946	ECUM1C106VBP	C.CAPACITOR CH 16V 10U	1	
C947	ECUX1C104KBV	C.CAPACITOR CH 16V 0.1U	1	
C948	ECUX1C104KBV	C.CAPACITOR CH 16V 0.1U	1	
C949	ECUM1E104KBN	C.CAPACITOR CH 25V 0.1U	1	
D901	MA329	DIODE	1	
D902	MA111	DIODE	1	
D903	MA6S121	DIODE	1	
D904	MA159A	DIODE	1	
D905	MA6S121	DIODE	1	
FP901	VJS4194B026	CONNECTOR (FEMALE) 26P	1	
FP903	VJS3971B017	CONNECTOR (FEMALE) 17P	1	
FP904	VJS3971B017	CONNECTOR (FEMALE) 17P	1	
FP905	VJS3319B006	CONNECTOR (FEMALE) 6P	1	
IC901	CM7018L3	IC	1	
IC902	TA75S558F	IC	1	
IC903	TA75S558F	IC	1	
IC904	AHC1G14DCK	IC	1	
IC905	AHC1G04DCK	IC	1	
IC906	TA75S558F	IC	1	
IC907	TA75S558F	IC	1	
IC908	SN74LV04APW	IC	1	
L901	VLQ0807K220	COIL 22UH	1	

Ref. No.	Part No.	Part Name & Description	Pcs	Remarks
L902	VLQ0426J100	COIL 10UH	1	
L903	VLQ0807K100	COIL 10UH	1	
L904	VLQ0807K100	COIL 10UH	1	
L905	VLQ0807K100	COIL 10UH	1	
L906	VLQ0807K100	COIL 10UH	1	
L907	VLQ0807K100	COIL 10UH	1	
L908	VLQ0807K100	COIL 10UH	1	
L909	VLQ0807K100	COIL 10UH	1	
L910	VLQ0807K100	COIL 10UH	1	
Q901	2SD2216	TRANSISTOR	1	
Q902	2SK2159	TRANSISTOR	1	
Q903	2SD2216	TRANSISTOR	1	
Q905	XP4601	TRANSISTOR-TRANSISTOR	1	
Q906	XP4601	TRANSISTOR-TRANSISTOR	1	
QR901	UN9210J	TRANSISTOR-RESISTOR	1	
QR903	UN9214J	TRANSISTOR-RESISTOR	1	
QR904	UN9210J	TRANSISTOR-RESISTOR	1	
R901	ERJ3GEYJ103	M.RESISTOR CH 1/16W 10K	1	
R902	ERJ3GEYJ105	M.RESISTOR CH 1/16W 1M	1	
R903	ERJ3GEYJ683	M.RESISTOR CH 1/16W 68K	1	
R904	ERJ2GEJ223	M.RESISTOR CH 1/16W 22K	1	
R905	ERJ3GEYJ683	M.RESISTOR CH 1/16W 68K	1	
R906	ERJ2GEJ472	M.RESISTOR CH 1/16W 4.7K	1	
R907	ERJ2GEJ473	M.RESISTOR CH 1/16W 47K	1	
R908	ERJ3GEYJ124	M.RESISTOR CH 1/16W 120K	1	
R909	ERJ2GEJ333	M.RESISTOR CH 1/16W 33K	1	
R910	ERJ2GEJ104	M.RESISTOR CH 1/16W 100K	1	
R911	ERJ2GEJ472	M.RESISTOR CH 1/16W 4.7K	1	
R912	ERJ2GEJ471	M.RESISTOR CH 1/16W 470	1	
R913	ERJ2GEJ333	M.RESISTOR CH 1/16W 33K	1	
R915	ERJ3RBD333	M.RESISTOR CH 1/16W 33K	1	
R916	ERJ3RBD182	M.RESISTOR CH 1/16W 1.8K	1	
R917	ERJ3GEY0R00	M.RESISTOR CH 1/16W 0	1	
R918	ERJ2GEJ272	M.RESISTOR CH 1/16W 2.7K	1	
R919	ERJ2GEJ101	M.RESISTOR CH 1/16W 100	1	
R920	ERJ2GEJ101	M.RESISTOR CH 1/16W 100	1	
R921	ERJ2GEJ101	M.RESISTOR CH 1/16W 100	1	
R922	ERJ2GEJ333	M.RESISTOR CH 1/16W 33K	1	
R923	ERJ2GEJ333	M.RESISTOR CH 1/16W 33K	1	
R924	ERJ2GEJ223	M.RESISTOR CH 1/16W 22K	1	
R925	ERJ2GEJ153	M.RESISTOR CH 1/16W 15K	1	
R926	ERJ3GEYJ682	M.RESISTOR CH 1/16W 6.8K	1	
R927	ERJ3GEYJ103	M.RESISTOR CH 1/16W 10K	1	
R929	ERJ2GEJ103	M.RESISTOR CH 1/16W 10K	1	
R930	ERJ2GEJ333	M.RESISTOR CH 1/16W 33K	1	
R931	ERJ2GEJ682	M.RESISTOR CH 1/16W 6.8K	1	
R932	ERJ2GEJ223	M.RESISTOR CH 1/16W 22K	1	
R933	ERJ2GEJ103	M.RESISTOR CH 1/16W 10K	1	
R934	ERJ2GEJ473	M.RESISTOR CH 1/16W 47K	1	
R935	ERJ2GEJ103	M.RESISTOR CH 1/16W 10K	1	
R936	ERJ2GEJ104	M.RESISTOR CH 1/16W 100K	1	
R937	ERJ3GEYJ103	M.RESISTOR CH 1/16W 10K	1	
R938	ERJ2GEJ682	M.RESISTOR CH 1/16W 6.8K	1	
R941	ERJ3GEYJ220	M.RESISTOR CH 1/16W 22	1	

Ref. No.	Part No.	Part Name & Description	Pcs	Remarks
R942	ERJ2GEJ104	M.RESISTOR CH 1/16W 100K	1	
R951	ERJ2GEJ560	M.RESISTOR CH 1/16W 56	1	
R952	ERJ2GEJ472	M.RESISTOR CH 1/16W 4.7K	1	
R953	ERJ3GEYJ823	M.RESISTOR CH 1/16W 82K	1	
R954	ERJ3GEY0R00	M.RESISTOR CH 1/16W 0	1	
R955	ERJ2GEJ563	M.RESISTOR CH 1/16W 56K	1	
R956	ERJ3RBD103	M.RESISTOR CH 1/16W 10K	1	
R957	ERJ3RBD101	M.RESISTOR CH 1/16W 100	1	
R958	ERJ2GEJ153	M.RESISTOR CH 1/16W 15K	1	
R959	ERJ2RHD513	M.RESISTOR CH 1/16W 51K	1	
R960	ERJ2GEJ223	M.RESISTOR CH 1/16W 22K	1	
R961	ERJ2GEJ223	M.RESISTOR CH 1/16W 22K	1	
R962	ERJ2GEJ561	M.RESISTOR CH 1/16W 560	1	
R963	ERJ2GEJ104	M.RESISTOR CH 1/16W 100K	1	
R964	ERJ2GEJ333	M.RESISTOR CH 1/16W 33K	1	
R965	ERJ2GEJ563	M.RESISTOR CH 1/16W 56K	1	
R966	ERJ2GEJ152	M.RESISTOR CH 1/16W 1.5K	1	
R967	ERJ2GEJ104	M.RESISTOR CH 1/16W 100K	1	
R968	ERJ2GEJ333	M.RESISTOR CH 1/16W 33K	1	
R969	ERJ2GEJ333	M.RESISTOR CH 1/16W 33K	1	
R970	ERJ2GEJ562	M.RESISTOR CH 1/16W 5.6K	1	
R971	ERJ3GEYJ335	M.RESISTOR CH 1/16W 3.3M	1	
R972	ERJ2GEJ224	M.RESISTOR CH 1/16W 220K	1	
R973	ERJ8GEYJ335	M.RESISTOR CH 1/8W 3.3M	1	
R974	ERJ8GEYJ335	M.RESISTOR CH 1/8W 3.3M	1	
R975	ERJ2GEJ223	M.RESISTOR CH 1/16W 22K	1	
R976	ERJ3RBD681	M.RESISTOR CH 1/16W 680	1	
R977	ERJ3RED180	M.RESISTOR CH 1/16W 18	1	
R978	ERJ6GEYJ335	M.RESISTOR CH 1/10W 3.3M	1	
R979	ERJ3GEYJ224	M.RESISTOR CH 1/16W 220K	1	
T901	ETJ09K49AZ	CHIP TRANSFORMER	1	
T902	EFTU21R202	TRANSFORMER	1	
■	VEK8817	MIC UNIT		
B6801	VSB0407	BATTERY	1	
C4801	ECUX1C333KBV	C.CAPACITOR CH 16V 0.033U	1	
C4802	ECUX1C823KBV	C.CAPACITOR CH 16V 0.082U	1	
C4804	ECUX1H561JCV	C.CAPACITOR CH 50V 560P	1	
C4805	ECUX1C473KBV	C.CAPACITOR CH 16V 0.047U	1	
C4806	ECUX1C333KBV	C.CAPACITOR CH 16V 0.033U	1	
C4807	ECUX1C823KBV	C.CAPACITOR CH 16V 0.082U	1	
C4808	ECUX1H561JCV	C.CAPACITOR CH 50V 560P	1	
C4809	ECUX1C473KBV	C.CAPACITOR CH 16V 0.047U	1	
C4814	ECUX1H103KBV	C.CAPACITOR CH 50V 0.01U	1	
C4816	ECUX1H103KBV	C.CAPACITOR CH 50V 0.01U	1	
C4817	ECST0JY226Z	T.CAPACITOR CH 6.3V 22U	1	
C4901	ECUX1H122KBV	C.CAPACITOR CH 50V 1200P	1	
C4902	ECUX1H122KBV	C.CAPACITOR CH 50V 1200P	1	
C4903	ECUM1A105KBN	C.CAPACITOR CH 10V 1U	1	
C4905	ECST0JY226Z	T.CAPACITOR CH 6.3V 22U	1	
C4908	ECUM1A105KBN	C.CAPACITOR CH 10V 1U	1	
C4910	ECST0JY226Z	T.CAPACITOR CH 6.3V 22U	1	

[illegible]	[illegible]	[illegible]	[illegible]	

Ref. No.	Part No.	Part Name & Description	Pcs	Remarks
C4911	ECST0JY226Z	T.CAPACITOR CH 6.3V 22U	1	
C4912	ECUX0J105KBV	C.CAPACITOR CH 50V 1U	1	
C4913	ECUX1H153KBV	C.CAPACITOR CH 50V 0.015U	1	
C4914	ECUX1C104KBV	C.CAPACITOR CH 16V 0.1U	1	
C4915	ECUX1E273KBV	C.CAPACITOR CH 25V 0.027U	1	
C4916	ECUX1C104KBV	C.CAPACITOR CH 16V 0.1U	1	
C4917	ECUX1E273KBV	C.CAPACITOR CH 25V 0.027U	1	
C6401	ECUX1C104KBV	C.CAPACITOR CH 16V 0.1U	1	
C6402	ECST0JY106Z	T.CAPACITOR CH 6.3V 10U	1	
D6801	CL150UR	LED	1	
FP4801	VJS3452A018	CONNECTOR (FEMALE) 18P	1	
IC4801	NJM2112V	IC	1	
IR6401	VEK8283	IR RECEIVER UNIT	1	
JK4801	VJJ0414	MIC JACK	1	
L6401	VLQ0807K220	COIL 22UH	1	
LB4901	VLQ0584	COIL	1	
Q4805	2SD2216	TRANSISTOR	1	
Q4810	2SD2216	TRANSISTOR	1	
Q4811	2SD2216	TRANSISTOR	1	
Q4901	2SD2216	TRANSISTOR	1	
Q4902	2SB1462-R	TRANSISTOR	1	
Q4903	2SD2216	TRANSISTOR	1	
Q4904	2SB1462-R	TRANSISTOR	1	
Q4905	2SD2216	TRANSISTOR	1	
Q4906	2SD2216	TRANSISTOR	1	
Q4907	2SD2216	TRANSISTOR	1	
QR4903	UN9212	TRANSISTOR-RESISTOR	1	
QR4904	UN9212	TRANSISTOR-RESISTOR	1	
R4801	ERJ6GEYJ392	M.RESISTOR CH 1/10W 3.9K	1	
R4802	ERJ6GEYJ392	M.RESISTOR CH 1/10W 3.9K	1	
R4803	ERJ6GEYJ392	M.RESISTOR CH 1/10W 3.9K	1	
R4805	ERJ3GEYJ153	M.RESISTOR CH 1/16W 15K	1	
R4806	ERJ3GEYJ333	M.RESISTOR CH 1/16W 33K	1	
R4807	ERJ3GEYJ153	M.RESISTOR CH 1/16W 15K	1	
R4808	ERJ3GEYJ333	M.RESISTOR CH 1/16W 33K	1	
R4809	ERJ3GEYJ153	M.RESISTOR CH 1/16W 15K	1	
R4810	ERJ3GEYJ153	M.RESISTOR CH 1/16W 15K	1	
R4811	ERJ3GEYJ153	M.RESISTOR CH 1/16W 15K	1	
R4812	ERJ3GEYJ153	M.RESISTOR CH 1/16W 15K	1	
R4814	ERJ3GEYJ333	M.RESISTOR CH 1/16W 33K	1	
R4815	ERJ3GEYJ153	M.RESISTOR CH 1/16W 15K	1	
R4816	ERJ3GEYJ153	M.RESISTOR CH 1/16W 15K	1	
R4818	ERJ3GEYJ153	M.RESISTOR CH 1/16W 15K	1	
R4823	ERJ3GEYJ223	M.RESISTOR CH 1/16W 22K	1	
R4824	ERJ3GEYJ333	M.RESISTOR CH 1/16W 33K	1	
R4861	ERJ3GEYJ472	M.RESISTOR CH 1/16W 4.7K	1	
R4864	ERJ3GEYJ472	M.RESISTOR CH 1/16W 4.7K	1	
R4898	ERJ3GEYJ104	M.RESISTOR CH 1/16W 100K	1	
R4899	ERJ3GEYJ104	M.RESISTOR CH 1/16W 100K	1	
R4901	ERJ3GEYJ682	M.RESISTOR CH 1/16W 6.8K	1	
R4902	ERJ3GEYJ682	M.RESISTOR CH 1/16W 6.8K	1	
R4904	ERJ3GEYJ104	M.RESISTOR CH 1/16W 100K	1	
R4905	ERJ3GEYJ471	M.RESISTOR CH 1/16W 470	1	
R4906	ERJ3GEYJ103	M.RESISTOR CH 1/16W 10K	1	

Ref. No.	Part No.	Part Name & Description	Pcs	Remarks
R4907	ERJ6GEYJ154	M.RESISTOR CH 1/10W 150K	1	
R4908	ERJ6GEYJ563	M.RESISTOR CH 1/10W 56K	1	
R4909	ERJ3GEYJ102	M.RESISTOR CH 1/16W 1K	1	
R4910	ERJ3GEYJ562	M.RESISTOR CH 1/16W 5.6K	1	
R4911	ERJ3GEYJ181	M.RESISTOR CH 1/16W 180	1	
R4912	ERJ3GEYJ471	M.RESISTOR CH 1/16W 470	1	
R4913	ERJ3GEYJ103	M.RESISTOR CH 1/16W 10K	1	
R4914	ERJ6GEYJ154	M.RESISTOR CH 1/10W 150K	1	
R4915	ERJ6GEYJ563	M.RESISTOR CH 1/10W 56K	1	
R4916	ERJ3GEYJ102	M.RESISTOR CH 1/16W 1K	1	
R4917	ERJ3GEYJ562	M.RESISTOR CH 1/16W 5.6K	1	
R4918	ERJ3GEYJ181	M.RESISTOR CH 1/16W 180	1	
R4919	ERJ3GEYJ472	M.RESISTOR CH 1/16W 4.7K	1	
R4920	ERJ3GEYJ103	M.RESISTOR CH 1/16W 10K	1	
R4921	ERJ3GEY0R00	M.RESISTOR CH 1/16W 0	1	
R4922	ERJ3GEY0R00	M.RESISTOR CH 1/16W 0	1	
R4924	ERJ3GEYJ222	M.RESISTOR CH 1/16W 2.2K	1	
R4925	ERJ3GEYJ223	M.RESISTOR CH 1/16W 22K	1	
R4926	ERJ3GEYJ104	M.RESISTOR CH 1/16W 100K	1	
R4928	ERJ3GEYJ222	M.RESISTOR CH 1/16W 2.2K	1	
R4929	ERJ3GEYJ223	M.RESISTOR CH 1/16W 22K	1	
R4930	ERJ3GEYJ104	M.RESISTOR CH 1/16W 100K	1	
R6801	ERJ6GEYJ331	M.RESISTOR CH 1/10W 330	1	
R6803	ERJ6GEYJ181	M.RESISTOR CH 1/10W 180	1	
S6801	VSP1021	SWITCH	1	
■	VEP28267A	E.V.F.(A) C.B.A.		(RTL)
BL820	VLL0216	FLUORESCENT LAMP PLATE	1	
Q881	2SK2055	TRANSISTOR	1	
R881	ERJ3GEYJ473	M.RESISTOR CH 1/16W 47K	1	
T881	ETJ11K91AM	TRANSFORMER	1	
	VWJ1174	FLAT CARD CABLE	1	
■	VEP28268A	E.V.F.(B) C.B.A.		(RTL)
C801	ECUM1C106VBP	C.CAPACITOR CH 16V 10U	1	
C802	ECUM1A226MBS	C.CAPACITOR CH 10V 22U	1	
C803	ECST0JY106Z	T.CAPACITOR CH 6.3V 10U	1	
C804	ECUX1C104KBV	C.CAPACITOR CH 16V 0.1U	1	
C805	ECUM1A335KBM	C.CAPACITOR CH 10V 3.3U	1	
C806	ECUX1H332KBV	C.CAPACITOR CH 50V 3300P	1	
C807	ECUX1H103KBV	C.CAPACITOR CH 50V 0.01U	1	
C808	ECUX1H200JCV	C.CAPACITOR CH 50V 20P	1	
C809	ECUX1H102KBV	C.CAPACITOR CH 50V 1000P	1	
C810	ECUX1A334KBV	C.CAPACITOR CH 10V 0.33U	1	
C811	ECUX1C104KBV	C.CAPACITOR CH 16V 0.1U	1	
C812	ECUX0J105KBV	C.CAPACITOR CH 50V 1U	1	
C814	ECUX1H471JCV	C.CAPACITOR CH 50V 470P	1	
C816	ECUX1C104KBV	C.CAPACITOR CH 16V 0.1U	1	
D801	MA338	DIODE	1	

Ref. No.	Part No.	Part Name & Description	Pcs	Remarks
FP801	VJS3319B018	CONNECTOR (FEMALE) 18P	1	
FP802	VJS4340B016	CONNECTOR (FEMALE) 16P	1	
IC801	CXD2458AR	IC	1	
IC803	TC7SET08FU	IC	1	
IC804	AHC1G04DCK	IC	1	
IC805	AHC1G14DCK	IC	1	
L801	VLQ0807K100	COIL 10UH	1	
L802	VLQ0807K100	COIL 10UH	1	
L803	VLQ0426J100	COIL 10UH	1	
L881	VLQ0779K100	COIL 10UH	1	
Q801	XN4601	TWIN TRANSISTOR	1	
R801	ERJ3GEY0R00	M.RESISTOR CH 1/16W 0	1	
R802	ERJ3GEY0R00	M.RESISTOR CH 1/16W 0	1	
R804	ERJ3GEY0R00	M.RESISTOR CH 1/16W 0	1	
R806	ERJ3GEYJ103	M.RESISTOR CH 1/16W 10K	1	
R807	ERJ3GEYJ102	M.RESISTOR CH 1/16W 1K	1	
R808	ERJ3GEYJ333	M.RESISTOR CH 1/16W 33K	1	
R809	ERJ3GEYJ394	M.RESISTOR CH 1/16W 390K	1	
R810	ERJ3GEYJ104	M.RESISTOR CH 1/16W 100K	1	
R811	ERJ3GEY0R00	M.RESISTOR CH 1/16W 0	1	
R812	ERJ3RBD104	M.RESISTOR CH 1/16W 100K	1	
R815	ERJ3GEYJ102	M.RESISTOR CH 1/16W 1K	1	
R818	ERJ3GEY0R00	M.RESISTOR CH 1/16W 0	1	
R822	ERJ3GEYJ101	M.RESISTOR CH 1/16W 100	1	
R823	ERJ3GEYJ103	M.RESISTOR CH 1/16W 10K	1	
R824	ERJ3RBD123	M.RESISTOR CH 1/16W 12K	1	
R825	ERJ3RBD472	M.RESISTOR CH 1/16W 4.7K	1	
R826	ERJ3RBD153	M.RESISTOR CH 1/16W 15K	1	
R827	ERJ3GEYJ103	M.RESISTOR CH 1/16W 10K	1	
R833	ERJ3GEYJ101	M.RESISTOR CH 1/16W 100	1	
R834	ERJ3GEYJ101	M.RESISTOR CH 1/16W 100	1	
R841	ERJ3GEYJ101	M.RESISTOR CH 1/16W 100	1	
■	VEP02571A	DRIVE C.B.A.		(RTL)
C2201	ECUX1E273KBV	C.CAPACITOR CH 25V 0.027U	1	
C2202	ECUM1A105KBN	C.CAPACITOR CH 10V 1U	1	
C2203	ECUX1H270JCQ	C.CAPACITOR CH 50V 27P	1	
C2204	ECUM1A564KBN	C.CAPACITOR CH 10V 0.56U	1	
C2205	ECUX1E332KBQ	C.CAPACITOR CH 25V 3300P	1	
C2207	ECUM1A105KBN	C.CAPACITOR CH 10V 1U	1	
C2208	ECUX1C104KBV	C.CAPACITOR CH 16V 0.1U	1	
C2209	ECUX1E223KBV	C.CAPACITOR CH 25V 0.022U	1	
C2210	ECUX1C473KBV	C.CAPACITOR CH 16V 0.047U	1	
C2211	ECST0JY475Z	T.CAPACITOR CH 6.3V 4.7U	1	
C2212	ECUX1C104ZFQ	C.CAPACITOR CH 16V 0.1U	1	
C2213	ECUX1C104ZFQ	C.CAPACITOR CH 16V 0.1U	1	
C2214	ECUX1C104ZFQ	C.CAPACITOR CH 16V 0.1U	1	
C2215	ECST0JY106Z	T.CAPACITOR CH 6.3V 10U	1	
C2217	ECUX1C104ZFQ	C.CAPACITOR CH 16V 0.1U	1	
C2218	ECUX1C104ZFQ	C.CAPACITOR CH 16V 0.1U	1	
C2219	ECUX1C104ZFQ	C.CAPACITOR CH 16V 0.1U	1	
C2223	ECUX1C103KBQ	C.CAPACITOR CH 16V 0.01U	1	

C2225	ECUX1C103KBQ	C.CAPACITOR CH 10V 0.01S	1	

Ref. No.	Part No.	Part Name & Description	Pcs	Remarks
C2225	ECST0JY106Z	T.CAPACITOR CH 6.3V 10U	1	
C2226	ECUX1C103KBQ	C.CAPACITOR CH 16V 0.01U	1	
C2227	ECUX1C103KBQ	C.CAPACITOR CH 16V 0.01U	1	
C2230	ECST0JY106Z	T.CAPACITOR CH 6.3V 10U	1	
C2231	ECUX1E102KBQ	C.CAPACITOR CH 25V 1000P	1	
C2232	ECST0JY106Z	T.CAPACITOR CH 6.3V 10U	1	
C2233	ECUM1A105KBN	C.CAPACITOR CH 10V 1U	1	
C2234	ECUX1H101JCQ	C.CAPACITOR CH 50V 100P	1	
C2235	ECUX1C104KBV	C.CAPACITOR CH 16V 0.1U	1	
C2236	ECUX1C104KBV	C.CAPACITOR CH 16V 0.1U	1	
C2237	ECUX1C104KBV	C.CAPACITOR CH 16V 0.1U	1	
C2239	ECST0JY106Z	T.CAPACITOR CH 6.3V 10U	1	
C2240	ECUX1H181JCQ	C.CAPACITOR CH 50V 180P	1	
C2246	ECUM1A684KBN	C.CAPACITOR CH 10V 0.68U	1	
C2247	ECUX1E102KBQ	C.CAPACITOR CH 25V 1000P	1	
C2248	ECUX1E102KBQ	C.CAPACITOR CH 25V 1000P	1	
C2249	ECUX1E102KBQ	C.CAPACITOR CH 25V 1000P	1	
C2250	ECST0GY476Z	T.CAPACITOR CH 4V 47U	1	
C2251	ECUX1C103KBQ	C.CAPACITOR CH 16V 0.01U	1	
C2255	ECUX1C104ZFQ	C.CAPACITOR CH 16V 0.1U	1	
C2256	ECUX1C104ZFQ	C.CAPACITOR CH 16V 0.1U	1	
C2257	ECUX1C104ZFQ	C.CAPACITOR CH 16V 0.1U	1	
FP2002	VJS3319B022	CONNECTOR (FEMALE) 22P	1	
FP2003	VJS3319B009	CONNECTOR (FEMALE) 9P	1	
FP2004	VJS3320B030	CONNECTOR (FEMALE) 30P	1	
IC2201	TB6519AF	IC	1	
IC2202	UN224	TRANSISTOR-RESISTOR	1	
IC2203	UN224	TRANSISTOR-RESISTOR	1	
IC2204	TA75S393F	IC	1	
IC2205	NJM2125F	IC	1	
IC2206	AHC1G86DCK	IC	1	
IC2207	BA6289F	IC	1	
PS2001	VJS3989C050	CONNECTOR (FEMALE) 50P	1	
Q2201	2SB1462-R	TRANSISTOR	1	
Q2202	2SD2216	TRANSISTOR	1	
Q2203	2SD2216	TRANSISTOR	1	
R2201	ERJ2GEJ682	M.RESISTOR CH 1/16W 6.8K	1	
R2202	ERJ2GEJ471	M.RESISTOR CH 1/16W 470	1	
R2204	ERJ2GEJ224	M.RESISTOR CH 1/16W 220K	1	
R2205	ERJ2GEJ102	M.RESISTOR CH 1/16W 1K	1	
R2207	ERJ2GEJ561	M.RESISTOR CH 1/16W 560	1	
R2208	ERJ8GEYJR33	M.RESISTOR CH 1/8W 0.33	1	
R2209	ERJ8GEYJR47	M.RESISTOR CH 1/8W 0.47	1	
R2210	ERJ2GEJ472	M.RESISTOR CH 1/16W 4.7K	1	
R2211	ERJ2GEJ472	M.RESISTOR CH 1/16W 4.7K	1	
R2212	ERJ8RQJR27	M.RESISTOR CH 1/8W 0.27	1	
R2213	ERJ2GEJ471	M.RESISTOR CH 1/16W 470	1	
R2214	ERJ2GEJ102	M.RESISTOR CH 1/16W 1K	1	
R2215	ERJ2GEJ103	M.RESISTOR CH 1/16W 10K	1	
R2216	ERJ2GEJ103	M.RESISTOR CH 1/16W 10K	1	
R2218	ERJ2GEJ103	M.RESISTOR CH 1/16W 10K	1	
R2220	ERJ2RHD104	M.RESISTOR CH 1/16W 100K	1	
R2221	ERJ2RHD561	M.RESISTOR CH 1/16W 560	1	
R2222	ERJ2GEJ153	M.RESISTOR CH 1/16W 15K	1	

Ref. No.	Part No.	Part Name & Description	Pcs	Remarks
R2223	ERJ2GEJ223	M.RESISTOR CH 1/16W 22K	1	
R2224	ERJ2GEJ182	M.RESISTOR CH 1/16W 1.8K	1	
R2225	ERJ2GEJ683	M.RESISTOR CH 1/16W 68K	1	
R2226	ERJ2GEJ103	M.RESISTOR CH 1/16W 10K	1	
R2227	ERJ2GEJ222	M.RESISTOR CH 1/16W 2.2K	1	
R2228	ERJ2GEJ105	M.RESISTOR CH 1/16W 1M	1	
R2229	ERJ2GEJ103	M.RESISTOR CH 1/16W 10K	1	
R2231	ERJ3GEYJ101	M.RESISTOR CH 1/16W 100	1	
R2232	ERJ2GEJ471	M.RESISTOR CH 1/16W 470	1	
R2233	ERJ6GEY0R00	M.RESISTOR CH 1/10W 0	1	
R2234	ERJ2GEJ394	M.RESISTOR CH 1/16W 390K	1	
R2235	ERJ2GEJ104	M.RESISTOR CH 1/16W 100K	1	
R2236	ERJ2GEJ273	M.RESISTOR CH 1/16W 27K	1	
R2237	ERJ2GEJ222	M.RESISTOR CH 1/16W 2.2K	1	
R2238	ERJ2GEJ122	M.RESISTOR CH 1/16W 1.2K	1	
R2250	ERJ2GE0R00	M.RESISTOR CH 1/16W 0	1	
RA2201	EXBV8V331J	RESISTOR-RESISTOR	1	
RA2203	EXBV4V102J	RESISTOR-RESISTOR	1	
	VMZ2839	INSULATION BARRIER	1	
■	VEP06D12A	SIDE JACK C.B.A.		(RTL)
C4051	ECUX1H472KBV	C.CAPACITOR CH 50V 4700P	1	
C4052	ECUX1H472KBV	C.CAPACITOR CH 50V 4700P	1	
C4053	ECUX1C104KBV	C.CAPACITOR CH 16V 0.1U	1	
C4054	ECUX1C104KBV	C.CAPACITOR CH 16V 0.1U	1	
C4055	ECUX1C104KBV	C.CAPACITOR CH 16V 0.1U	1	
C4056	ECUX1H221JCV	C.CAPACITOR CH 50V 220P	1	
C4057	ECUX1H221JCV	C.CAPACITOR CH 50V 220P	1	
C4059	ECUX1C104KBV	C.CAPACITOR CH 16V 0.1U	1	
D4051	MA132WA	DIODE	1	
D4052	MA132WK	DIODE	1	
FL4051	VLF1445	FILTER	1	
FL4052	VLF1486A206	FILTER	1	
FL4053	VLF1486A206	FILTER	1	
FL4054	VLF1469A206	FILTER	1	
J4050	VJJ0567	EDIT-E JACK (5P)	1	
J4051	VJJ0668	AV JACK (4P)	1	
PP4901	VJP3847D030	CONNECTOR (MALE) 30P	1	
R4053	ERJ3GEY0R00	M.RESISTOR CH 1/16W 0	1	
R4054	ERJ3GEYJ103	M.RESISTOR CH 1/16W 10K	1	
R4056	ERJ3GEYJ101	M.RESISTOR CH 1/16W 100	1	
R4057	ERJ3GEYJ101	M.RESISTOR CH 1/16W 100	1	
R4058	ERJ3GEY0R00	M.RESISTOR CH 1/16W 0	1	
■	VEP06D13A	REAR OPERATION C.B.A.		(RTL)
D6701	CL150YG-CD	DIODE	1	
D6702	CL150UR	LED	1	
FP6701	VJS3498A014	CONNECTOR (FEMALE) 14P	1	
FP6702	VJS3319B005	CONNECTOR (FEMALE) 5P	1	

Ref. No.	Part No.	Part Name & Description	Pcs	Remarks
S6701	ESE103119	SWITCH	1	
S6702	VMG0763	RUBBER SWITCH	1	
S6703	EVQPA401K	PUSH SWITCH	1	
S6704	ESD165236	SWITCH	1	
	VEK8533	DEW SENSOR	1	
■	VEP22292A	CCD FLEX.CARD C.B.A.		(RTL)
C294	ECST1VX225Z	T.CAPACITOR CH 35V 2.2U	1	
C295	ECUM1E104KBN	C.CAPACITOR CH 25V 0.1U	1	
D291	MA143	DIODE	1	
PP291	VJP4009C020	CONNECTOR (MALE) 20P	1	
Q291	2SC3930	CHIP TRANSISTOR	1	
R292	ERJ6GEYJ472	M.RESISTOR CH 1/10W 4.7K	1	
	VJB22292	FLEX. CARD	1	
■	VEP06D14A	REAR JACK C.B.A.		(RTL)
JK1701	VEJ1839	JACK BOARD	1	
JK1802	VEK8426	BATTERY CATCHER	1	
	VEK8816	FLEX. CARD	1	
■	VEP06C60A	SENSOR FLEX. CARD		(RTL)
IC991	DN8797MSC	IC	1	
IC992	DN8797MSC	IC	1	
■	VEP06D35A	MENU OPERATION C.B.A.		(RTL)
FP6803	VJS3319B006	CONNECTOR (FEMALE) 6P	1	
S6901	VSR0235	SWITCH	1	
■	VEK8231	LENS FLEX.CARD C.B.A.		(RTL)
	0N1004-R	PHOTO INTERRUPTER	1	
	VJB20752	FLEX. CARD	1	
■	VEP05352A	HEAD AMP C.B.A.		(RTL)
C5001	ECUX1C103KBQ	C.CAPACITOR CH 16V 0.01U	1	
C5002	ECUX1C103KBQ	C.CAPACITOR CH 16V 0.01U	1	
C5004	ECUX1C103KBQ	C.CAPACITOR CH 16V 0.01U	1	
C5007	ECUX1C103KBQ	C.CAPACITOR CH 16V 0.01U	1	
C5010	ECUX1C103KBQ	C.CAPACITOR CH 16V 0.01U	1	
C5013	ECUX1E152KBQ	C.CAPACITOR CH 25V 1500P	1	
C5014	EEJK0JS106	E.CAPACITOR 6.3V 10U	1	

Ref. No.	Part No.	Part Name & Description	Pcs	Remarks
C5015	ECUX1C103KBQ	C.CAPACITOR CH 16V 0.01U	1	
C5016	ECUX1H330JCQ	C.CAPACITOR CH 50V 33P	1	
C5017	ECUX1C103KBQ	C.CAPACITOR CH 16V 0.01U	1	
C5018	ECUX1H220JCQ	C.CAPACITOR CH 50V 22P	1	
C5019	ECUX1C103KBQ	C.CAPACITOR CH 16V 0.01U	1	
C5020	EEJK0JS106	E.CAPACITOR 6.3V 10U	1	
C5021	EEJK0JS106	E.CAPACITOR 6.3V 10U	1	
C5023	ECUX1C103KBQ	C.CAPACITOR CH 16V 0.01U	1	
C5024	ECUX1C103KBQ	C.CAPACITOR CH 16V 0.01U	1	
C5025	EEJK0JS106	E.CAPACITOR 6.3V 10U	1	
C5026	ECUX1E152KBQ	C.CAPACITOR CH 25V 1500P	1	
C5027	ECUX1H330JCQ	C.CAPACITOR CH 50V 33P	1	
C5028	ECUX1E122KBQ	C.CAPACITOR CH 25V 1200P	1	
C5029	ECUM1A105KBN	C.CAPACITOR CH 10V 1U	1	
C5030	ECUX1E102KBQ	C.CAPACITOR CH 25V 1000P	1	
C5031	ECUX1C103KBQ	C.CAPACITOR CH 16V 0.01U	1	
C5032	ECUX1H470JCQ	C.CAPACITOR CH 50V 47P	1	
C5033	ECUX1E681KBQ	C.CAPACITOR CH 25V 680P	1	
C5034	ECUX1C103KBQ	C.CAPACITOR CH 16V 0.01U	1	
C5035	EEJK0JS106	E.CAPACITOR 6.3V 10U	1	
C5036	EEJK0JS106	E.CAPACITOR 6.3V 10U	1	
C5037	EEJK0JS106	E.CAPACITOR 6.3V 10U	1	
C5038	ECUX1C103KBQ	C.CAPACITOR CH 16V 0.01U	1	
C5039	ECUX1C103KBQ	C.CAPACITOR CH 16V 0.01U	1	
C5040	ECUX1C103KBQ	C.CAPACITOR CH 16V 0.01U	1	
FP5001	VJS3320B008	CONNECTOR (FEMALE) 8P	1	
IC5001	AN3731FHQ	IC	1	
L5002	VLQ0808J220	COIL 22UH	1	
L5003	VLQ0808J220	COIL 22UH	1	
L5005	VLQ0807M4R7	COIL 4.7UH	1	
L5007	VLQ0807M4R7	COIL 4.7UH	1	
Q5002	2SC3937	TRANSISTOR	1	
Q5003	2SC3937	TRANSISTOR	1	
Q5005	2SD1819A	TRANSISTOR	1	
Q5006	2SD1819A	TRANSISTOR	1	
R5002	ERJ2GEJ471	M.RESISTOR CH 1/16W 470	1	
R5003	ERJ2GEJ103	M.RESISTOR CH 1/16W 10K	1	
R5004	ERJ2GE0R00	M.RESISTOR CH 1/16W 0	1	
R5005	ERJ2GEJ102	M.RESISTOR CH 1/16W 1K	1	
R5010	ERJ2GEJ680	M.RESISTOR CH 1/16W 68	1	
R5012	ERJ3GEYJ152	M.RESISTOR CH 1/16W 1.5K	1	
R5013	ERJ3GEYJ123	M.RESISTOR CH 1/16W 12K	1	
R5014	ERJ2GEJ271	M.RESISTOR CH 1/16W 270	1	
R5015	ERJ2GEJ271	M.RESISTOR CH 1/16W 270	1	
R5016	ERJ2GEJ102	M.RESISTOR CH 1/16W 1K	1	
R5017	ERJ2GEJ102	M.RESISTOR CH 1/16W 1K	1	
R5018	ERJ2GEJ680	M.RESISTOR CH 1/16W 68	1	
R5019	ERJ3GEYJ123	M.RESISTOR CH 1/16W 12K	1	
R5020	ERJ3GEYJ152	M.RESISTOR CH 1/16W 1.5K	1	
R5021	ERJ3GEYJ100	M.RESISTOR CH 1/16W 10	1	
R5024	ERJ2GEJ103	M.RESISTOR CH 1/16W 10K	1	
R5025	ERJ2GEJ271	M.RESISTOR CH 1/16W 270	1	
R5026	ERJ2GE0R00	M.RESISTOR CH 1/16W 0	1	
R5028	ERJ2GEJ152	M.RESISTOR CH 1/16W 1.5K	1	

Ref. No.	Part No.	Part Name & Description	Pcs	Remarks
R5029	ERJ6GEY0R00	M.RESISTOR CH 1/10W 0	1	
	VSC4639	SHIELD COVER	1	

INITIAL/LOGO		ABBREVIATIONS
	LVL	LPF Switch for Auto Focus
M	M1-3	Motor Coil Terminal 1 to 3
	MA0-5	Microprocessor Address Data 0-5
	Mbps	Megahertz Bit Per Second
	MD	Modulation
	MD0-7	Microprocessor Data 0-7
	MDT0-7	Microprocessor Data 0-7
	ME (TAPE)	Metal Evaporated (Tape)
	MENB	Focus Motor Enable
	MFF	Manual Focus Far
	MFN	Manual Focus Near
	MHSYNC	Monitor Horizontal Sync Signal
	MIC	Memory In Cassette
	MIG	Meta In Gap
	MIX N.R.D.	Non Rec Data Mix
	MOD	Modulation
	MOUT	Mic Out
	MP (TAPE)	Metal Particle (Tape)
	MPEG	Moving Picture Image Cording Experts Group
	MPEG2	Moving Picture Image Cording Experts Group Phase 2
	MRST	Focus Motor Reset
	MSB	Most Signal Bit
	MVSYNC	Monitor Vertical Sync Signal
N	N/F	Near/Far Focus
	N/P	NTSC/PAL
	NB1-3	Base for NPN Transistor
	NC	No Connection
	NC1-3	Corrector of NPN Transistor
	NCLR	Power On Reset
	NCP1	Clamp Pulse
	NCP2+VDH	Clamp Pulse + Horizontal Drive Pulse
	NCP2+VDM	Clamp Pulse + Gate Pulse
	NDE	Non Liner De-Emphasis
	NE	Emitor of NPN Transistor
	NLE	Non Liner Emphasis
	NR	Noise Reduction
	NRD	Non Rec Data
	NRD BLK	Non Rec Data Blanking
	NRD CLK	No Rec Data Clock
	NRE	Read Enable Input (Low Active)
	NWE	Write Enable (Low Active)
O	OB	Optical Black
	OBCNT	Optical Black Control
	OBREF	Reference Voltage for Optical Black Control
	OE	Output Enable
	OFH	Horizontal Counted Down Clock Signal (Reference)
	OFS	Offset
	OP	Operation AMP Output
	OSD	ON Screen Display
	OVL	Overlap Pulse
	OZ	Optical Zoom

INITIAL/LOGO		ABBREVIATIONS
P	P SW	Power Switch
	PB1-3	PNP Base 1-3
	PBCTL	Play Back Control
	PBCTL	Pre-Branking Control
	PBH	Head Amp Switch
	PBLK	Pre-Blanking (Pulse)
	PC1-3	Corrector of PNP Transistor
	PCBM	Carrier Balance
	PCH	Phase Compensator (Hall AMP)
	PCI	Phase Compensator (Current)
	PCO	Phase Compensator Out
	PCS	Switching Power Control
	PCV	Phase Compensator (Voltage)
	PE	Emitter of PNP Transistor
	PED	Pedestal
	PEDECNT	Pedestal Control
	PENO	Alarm (L)
	PFP	Pilot Frame Position
	PGA, B	Power Ground A, B
	PGC	Pulse Generator Comparator
	PGI	Pulse Generator Input
	PGMM	Pulse Generator Monostable Multivibrator
	PGO	Output of Pulse Generator AMP
	PMODE	Select Signal for Normal / Wide Screen
	PON	Power On
	POR	Power On Reset
	POSCOM	Common Position
	PREAMP	Pre-AMP
	PREBLK	Pre-Blanking
	PT	Protect for V Voltage
	PWM	Pulse Width Modulation
	PWMB	Pulse Width Modulation Pulse
Q	Q2H	Source Output Select
R	R CTL P	Recorded Control Pulse (+)
	R CTL R	Recorded Control Pulse (–)
	R/B	Read/Busy
	R/L	Direction Control for Data Transmition
	RA	Recording AMP
	RA1	Rec AMP 1
	RAC AC	Rec Audio Current
	RAD	Read Address Data
	RAE	Read Address Enable
	RB	Read Busy
	R-B	R Bias
	RCB	R Carrier Balance
	RE	Read Enable
	RE(F), (S)	Rotary Erase Head Transformer
	REB	R Bias
	REC CC	Rec Current Control
	REC CCNT	Rec Current Control
	RECCTRL	Recording Control Pulse
	RECI	Rec Amp Switch

INITIAL/LOGO		ABBREVIATIONS
	RENCF	Lens Control (Forward)
	RENCR	Lens Control (Reverse)
	RERASE	Rotary Erase Head
	RGBIV1-2	1V Inverted Signal 1-2
	RGO R/G OFF	Offset Voltage for AWT R
	RSF	Capstan Direction (Reverse / Stop / Forward)
	RST	Reset
	RSTB	R Strobe
	RSTPWD	Reset Power Down Input
	RSTR	Reset Read
	RSTW	Reset Write
	RT	Saw Tooth Terminal
	RVCO	Resister for Oscillation
	RW	Read Write
	RWAE	Read Write Enable
S	S PHOT	Supply Photo Transistor
	S/H	Sampling Hold
	S/S	Start/Stop
	SBD	Serial Data
	SBI	Serial Data Input
	SBO	Serial Data Output
	SBT	Serial Clock
	SCAN0-5	Key Scan 0-5
	SCK	Serial Clock
	SCR	Search
	SCR, S.C.R.	Still Cue Review
	SEG.	Segment
	SET	White Balance Set
	SH/IRIS	Shutter/Iris Control
	SHIFT	Capasitor for Phase Shift
	SI	Serial Data Input
	SIC	Shift In Clock Input
	SIOC	Serial In/Out Control
	SMCE	Shaffling Memory Chip Enable
	SMRS	Shaffling Memory Read Strobe
	SMWE	Shaffling Memory Write Enable
	SMWS	Shaffling Memory Read Strobe
	SNAP	Snap Shot
	SNS LED	Sensor LED
	SO	Serial Data Output
	SPA	ATF Smapling Pulse
	SPEN	8 Bit Shift Register Enable
	SPK	Speaker
	SPO	Reset for Switcing Power
	SPST	8 Bit Shift Register Strobe
	SREELP	Supply Reel Pulse
	SRT	Start
	SSA	Start Sync block Area
	SSW	Select Signal for Low Pass Filter
	ST5V	Safety Tab 5V
	STAB	Safety Tab Switch
	STB	Stand by Signal
	STB	Strobe
	SWB	Switching Pre-Drive Pulse
	SYL EC	Cylinder Torque Control
	SYL FG	Cylinder FG
T	T PHOT	Take-up Photo Transistor
	TBC	Time Base Conntrol
	TFT	Thim Film Transistor
	TH	Thermostat for Battery
	TI	Test Mode Select
	TL	Torque Limit
	TM	Sub Code
	TMD	Sub Code Data
	TRE	Tracking Error Signal
	TREEL(P)	Take-up Reel (Pulse)
	TRFIX	Tracking Fix
	TRIWAVE	Tracking Wave
	TRP	Tracking Position
	TRP	Trap
	TSR	Head Switching Refference
	TST	Time Scale Transfer
U	U/V SEL	R-Y/B-Y Select Signal
	UNLOAD	Un-Loading
	UNRE	Microprocessor Read Enable
	UNWE	Microprocessor Write Enable
	UV	R-Y/B-Y
	UV SEL	R-Y/B-Y Select Signal
V	V1-V4	V. CCD Drive Pulse
	VB	VH Filter Switching
	VCE	Power Terminal
	VCNTL	Video Control
	VCO	Voltage Control Oscillator
	VCP	Shift Clock Output for Vertical Drive
	VCTLD	Video Control
	VCTRL	Voltage Charge Control
	VD	Vertical Drive Pulse
	VDDX	X Drive Power for Colour LCD
	VDDXY	XY Drive Power for Colour LCD
	VDDY	Y Drive Power for Colour LCD
	VDREC	Video Delayed Rec
	Vgg	Voltage for Gate IC
	Vgl	Gate off Voltage
	VID	Video Signal Out
	VIN	Video In
	VITC	Vertical Interval Time Code
	VITERBI	One of Signal Detection Method
	VL	Low Voltage
	VLC	Variable Length Cording
	VLOCKP	Artificial Sync Pulse
	VLP	Artificial Sync Pulse
	VM	Motor Voltage
	VMD	Velocity Mode Data
	VMD1-3	Electric Shutter Mode

INITIAL/LOGO		ABBREVIATIONS
	VMODE	NTSC/PAL Select Switch
	VMVH	VH Filter Switching
	VORP	Video Overlap
	VRB	Voltage Refference Bottom
	VRBS	Voltage Refference Bottom Output
	VREF1R3V	Refference Voltage 1.3V
	VREF3R3V	Refference Voltage 3.3V
	VREFH	Refference Voltage High Side
	VREFL	Refference Voltage Low Side
	VRI	Refference Voltage Input
	VRO	Refference Voltage Output
	VRT	Voltage Refference Top
	VRTS	Voltage Refference Top Output
	VS	Switching Comparator
	VSS	Vertical Sync Signal
	VSSX	X Driver Power for Colour LCD
	VSSXY	X-Y Driver Power for Colour LCD
W	W/N	Mode Select for Window Mode
	W/N	Wide / Normal
	WAD	Write Address Enable
	WAE	Write Address Enable
	WAERAE	Write Address Enable
	WARI	Interrupt
	WB	White Balance
	WE	Write Enable
	WEM	Memory Write Enable
	WHD	Wide Horizontal Drive Pulse
	WIDE A	Wide Zoom
	WSB	B AGC Control
	WSR	R AGC Control
	WTV	Wide TV
X	XP	FG Logic Reset
Y	Y FM0-7	Y Field Memory 0-7
	YCE	Cylinder Error Code
	YGC	Y Gain Control
	YMO 0-7	Y Field Memory 0-7
	YNCST	Noize Canceller
	YNR	Luminance Noise Reduction
	YSDP 0-7	Digital Y Out 0-7
Z	Z.ENC	Zoom Encoder
	Z.MIC	Zoom Mic
	ZENC	Zoom Encoder Output
	ZMDIR	Zoom Drive
	ZMEN	Zoom Enable
	ZMT	Zoom Motor Tele Side
	ZMT (+)/(–)	Zoom Motor (+)/(–)
	ZMTER	Zoom Motor Tele Side
	ZMW	Zoom Motor Wide Side
	ZSW	Zoom Switch

INITIAL/LOGO	ABBREVIATIONS

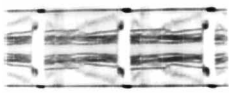

FP904-10 STOP
3.4 Vp-p (5msec./div.)
COLOUR BAR

FP904-11 STOP
3.4 Vp-p (5msec./div.)
COLOUR BAR

FP904-12 STOP
3.6 Vp-p (5msec./div.)
COLOUR BAR

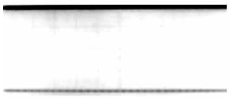

IC901-37 STOP
3.0 Vp-p (0.2msec./div.)
COLOUR BAR

IC901-34 STOP
3.0 Vp-p (1msec./div.)
COLOUR BAR

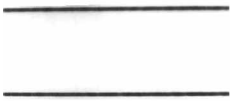

IC901-12 STOP
3.0 Vp-p (0.2msec./div.)
COLOUR BAR

IC901-24 STOP
4.0 Vp-p (5msec./div.)
COLOUR BAR

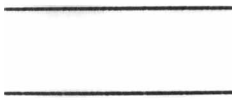

IC901-11 STOP
3.0 Vp-p (0.5msec./div.)
COLOUR BAR

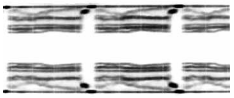

FP801-13 STOP
8.0 Vp-p (5msec./div.)
COLOUR BAR

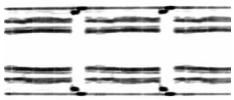

IC801-14 STOP
8.0 Vp-p (5msec./div.)
COLOUR BAR

FP801-15 STOP
8.0 Vp-p (5msec./div.)
COLOUR BAR

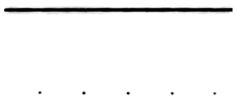

IC801-45 STOP
3.0 Vp-p (10msec./div.)
COLOUR BAR

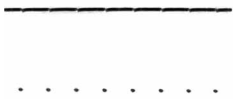

IC801-27 STOP
3.0 Vp-p (50µsec./div.)
COLOUR BAR

IC801-20 STOP
3.0 Vp-p (50µsec./div.)
COLOUR BAR

IC801-23 STOP
3.0 Vp-p (2µsec./div.)
COLOUR BAR

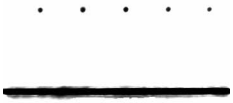

IC801-24 STOP
3.2 Vp-p (10msec./div.)
COLOUR BAR

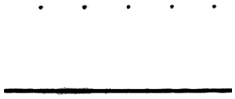

IC801-18 STOP
3.2 Vp-p (10msec./div.)
COLOUR BAR

IC801-36 STOP
3.2 Vp-p (50µsec./div.)
COLOUR BAR

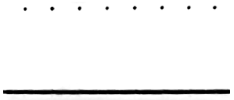

IC801-22 STOP
3.2 Vp-p (50µsec./div.)
COLOUR BAR

IC801-28 STOP
3.0 Vp-p (0.1msec./div.)
COLOUR BAR

IC2201-58 REC/PLAY
2.8 Vp-p (0.2msec./div.)

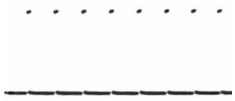

IC2201-59 REC/PLAY
2.2 Vp-p (5msec./div.)

IC2201-60 REC/PLAY
2.8 Vp-p (1msec./div.)

IC1001-4 STOP
1.0 Vp-p (1µsec./div.)

IC1001-46 STOP
1.2 Vp-p (0.5µsec./div.)

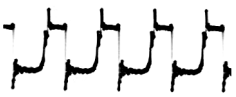

IC1001-56 STOP
1.4 Vp-p (0.5µsec./div.)

IC1001-57 STOP
1.0 Vp-p (0.5µsec./div.)

IC1001-64 STOP
1.0 Vp-p (0.5µsec./div.)

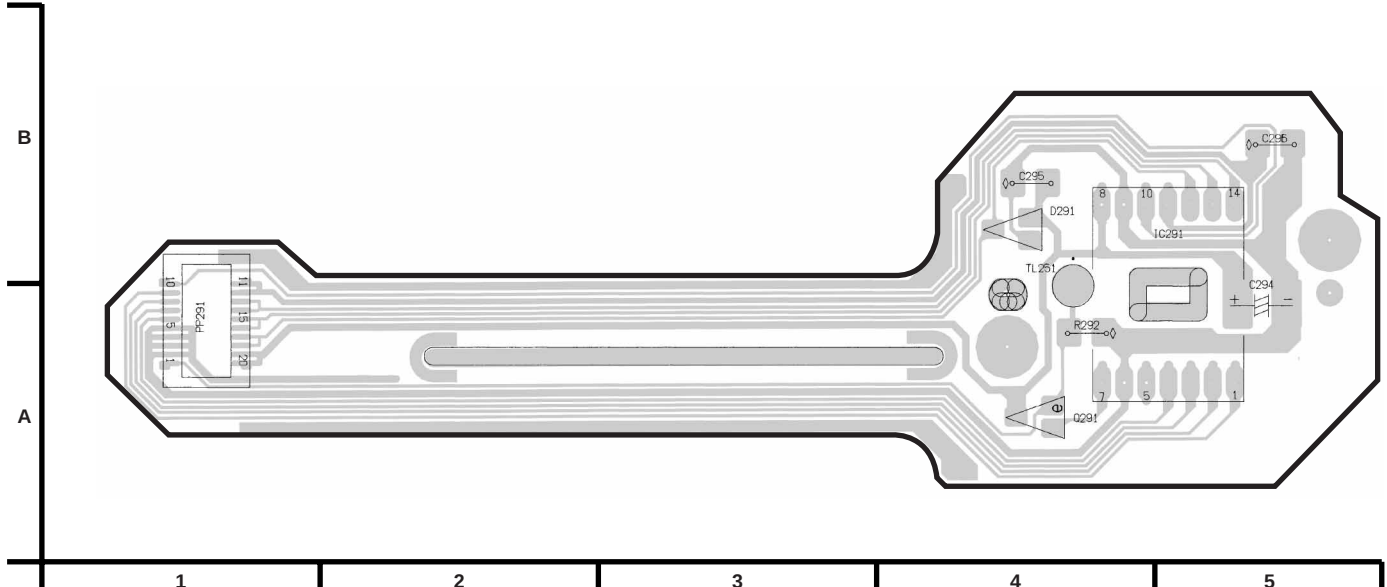
B
A
1
2
3
4
5
PP291
C295
C296
D291
IC291
TL251
C294
R292
Q291

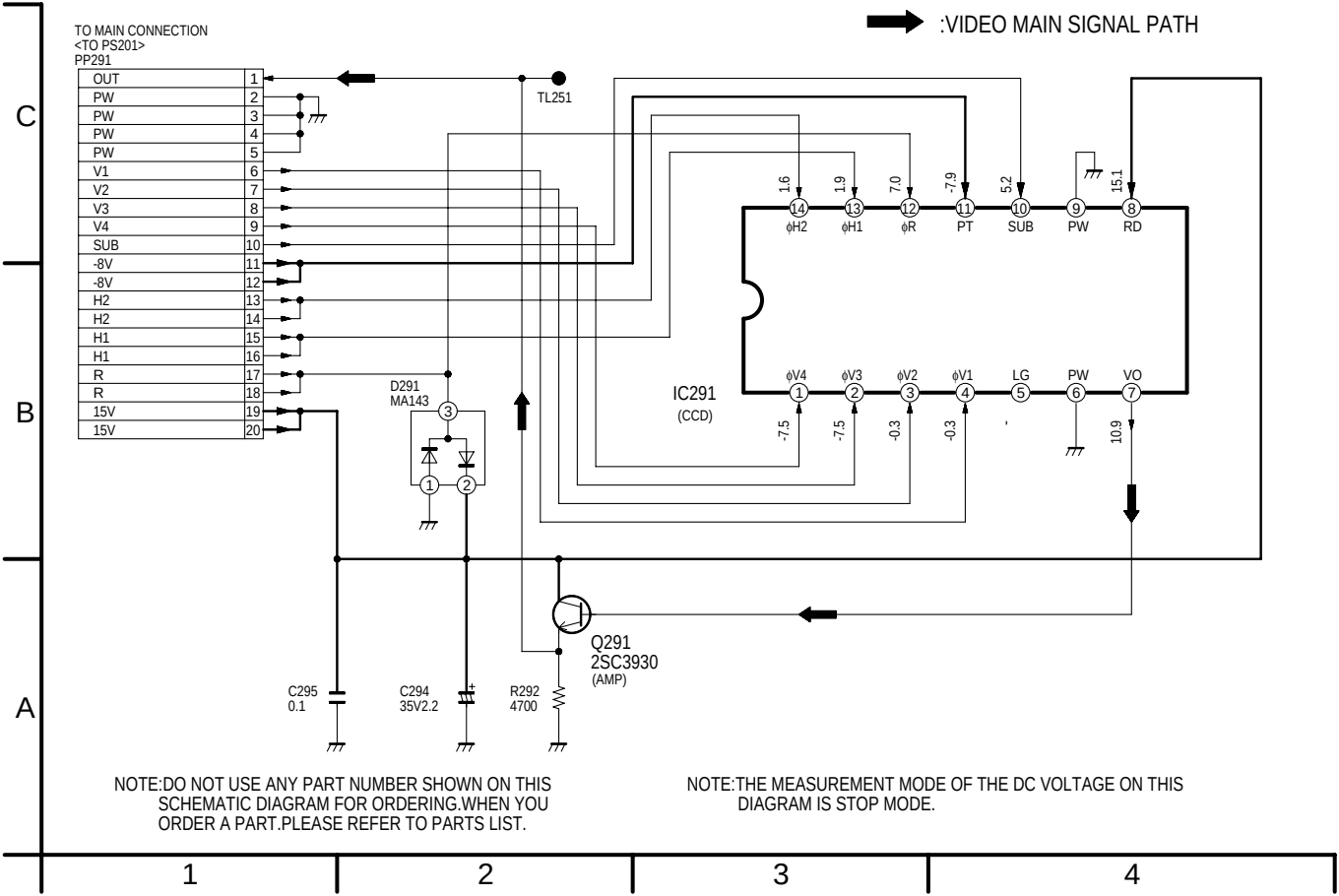
:VIDEO MAIN SIGNAL PATH
TO MAIN CONNECTION
<TO PS201>
PP291
OUT 1
PW 2
PW 3
PW 4
PW 5
V1 6
V2 7
V3 8
V4 9
SUB 10
-8V 11
-8V 12
H2 13
H2 14
H1 15
H1 16
R 17
R 18
15V 19
15V 20
TL251
IC291
(CCD)
ϕH2 ϕH1 ϕR PT SUB PW RD
ϕV4 ϕV3 ϕV2 ϕV1 LG PW VO
1.6 1.9 7.0 -7.9 5.2 15.1
-7.5 -7.5 -0.3 -0.3 10.9
D291
MA143
Q291
2SC3930
(AMP)
C295
0.1
C294
35V2.2
R292
4700
NOTE:DO NOT USE ANY PART NUMBER SHOWN ON THIS SCHEMATIC DIAGRAM FOR ORDERING.WHEN YOU ORDER A PART.PLEASE REFER TO PARTS LIST.
NOTE:THE MEASUREMENT MODE OF THE DC VOLTAGE ON THIS DIAGRAM IS STOP MODE.
C
B
A
1
2
3
4

DRIVE C.B.A.											
Integrated Circuit		**Capacitor**		C2219	A-2	C2248	C-1	R2212	A-3	R2232	B-1
IC2201	B-3	C2201	B-4	C2223	B-2	C2249	B-1	R2213	B-2	R2233	A-2
IC2202	B-2	C2202	B-4	C2225	B-2	C2250	A-2	R2214	B-2	R2234	C-4
IC2203	B-2	C2203	B-3	C2226	B-2	C2251	B-4	R2215	B-4	R2235	C-4
IC2204	B-4	C2204	B-4	C2227	A-3	C2255	B-4	R2216	A-4	R2236	B-4
IC2205	A-4	C2205	B-4	C2230	B-4	C2256	B-4	R2218	A-4	R2237	B-4
IC2206	B-4	C2207	B-4	C2231	B-4	C2257	C-4	R2220	B-4	R2238	A-3
IC2207	B-4	C2208	C-4	C2232	B-4	**Resistor**		R2221	B-4	R2250	A-4
Transistor		C2209	C-3	C2233	B-4	R2201	B-4	R2222	A-4	**Resistor Array**	
Q2201	A-4	C2210	C-4	C2234	B-3	R2202	B-4	R2223	B-4	RA2201	B-2
Q2202	B-4	C2211	B-3	C2235	C-1	R2204	B-4	R2224	B-4	RA2203	B-3
Q2203	A-4	C2212	B-2	C2236	C-1	R2205	B-4	R2225	B-4		
Connector		C2213	B-2	C2237	B-1	R2207	C-4	R2226	A-4		
FP2002	B-1	C2214	B-2	C2239	A-4	R2208	C-3	R2227	B-4		
FP2003	C-1	C2215	A-2	C2240	B-4	R2209	C-3	R2228	B-4		
FP2004	C-4	C2217	B-2	C2246	B-4	R2210	B-4	R2229	B-4		
PS2001	A-3	C2218	B-2	C2247	B-1	R2211	B-4	R2231	A-2		

ADDRESSINFORMATION

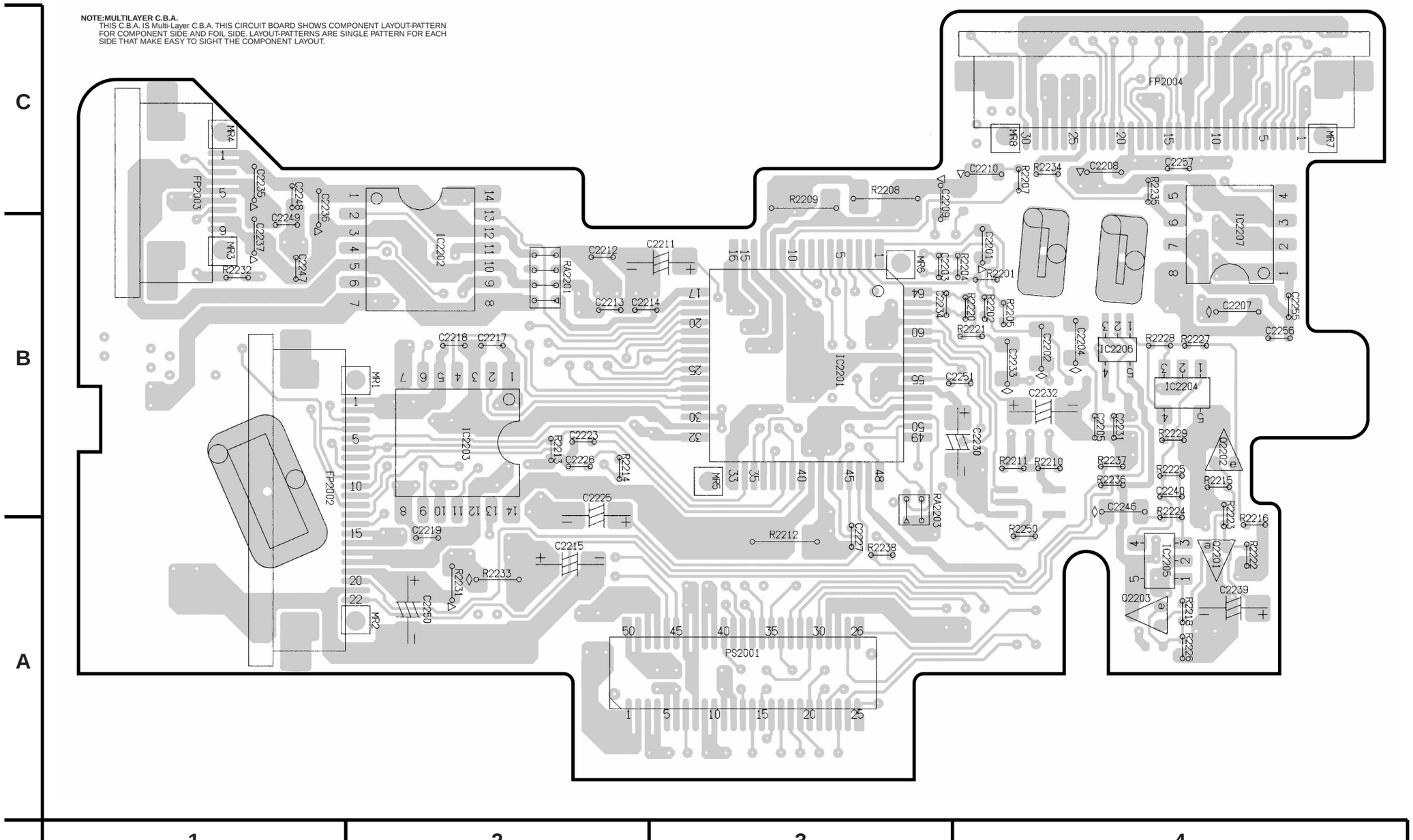

:CAPSTAN SERVO SPEED LOOP
:CAPSTAN SERVO PHASE LOOP
:CYLINDER SERVO SPEED LOOP
:CYLINDER SERVO PHASE LOOP

TO MAIN CONNECTION
<TO PP2001>
PS2001

S 3V	1
S 3V	2
NOREG GND	3
NOREG GND	4
CYL VM	5
CYL VM	6
CYL SW	7
MIC GND	8
CYL GND	9
CYL GND	10
CAP VM	11
CAP VM	12
CAP FG	13
CAP RSF	14
CYL ERR	15
UNLOAD	16
S PHOTO	17
POS2	18
SNS LED	19
S REEL OUT	20
T REEL IN	21
T PHOTO	22
S TAB	23
MIC DT	24
C DOWN	25
MIC VDD	26
MIC CLK	27
SOLENOID	28
SOLENOID	29
S REEL IN	30
T REEL OUT	31
POS3	32
POS1	33
LOAD	34
TORQU LIMIT	35
CAP ERR	36
CYL ON	37
DRIVE CLK	38
CYL PG	39
CYL FG	40
CAP GND	41
CAP GND	42
D GND	43
D GND	44
TRI WAVE	45
CAP SW	46
NOREG	47
NOREG	48
S 5V	49
S 5V	50

TO MECHA. UNIT
FP2004

D GND	1
C DOWN	2
MIC VDD	3
MIC DT	4
MIC CLK	5
MIC GND	6
S TAB	7
D GND	8
D GND	9
SOLENOID	10
SOLENOID	11
T PHOTO	12
S 3V	13
T REEL IN	14
S REEL IN	15
D GND	16
S REEL OUT	17
T REEL OUT	18
NOREG GND	19
SNS LED	20
POS3	21
POS2	22
POS1	23
D GND	24
LOAD	25
LOAD	26
UNLOAD	27
UNLOAD	28
S 3V	29
S PHOTO	30

IC2206
AHC1G86DCK

IC2201
TB6519AF
(CYL/CAP DRIVE)

IC2204
TA75S393F

IC2205
NJM2125F

IC2207
BA6289F
(LOADING MOTOR DRIVE)

IC2202
UN224
(CYL DRIVE)

IC2203
UN224
(CAP DRIVE)

Q2201
2SB1462-R
(SWITCHING)

Q2202
2SD2216
(AMP)

Q2203
2SD2216
(SWITCHING)

FP2003

M3	1
M3	2
PG(+)	3
M1	4
M1	5
FG/PG GND	6
FG(+)	7
M2	8
M2	9

FP2002

M1	1
M1	2
H3(+)	3
VH(+)	4
H3(-)	5
VH(-)	6
VH(-)	7
H1(+)	8
VH(+)	9
H1(-)	10
H2(-)	11
VH(-)	12
H2(+)	13
VH(+)	14
M2	15
M2	16
M3	17
M3	18
VMR	19
AFG1	20
GND	21
AFG2	22

NOTE:DO NOT USE ANY PART NUMBER SHOWN ON THIS SCHEMATIC DIAGRAM FOR ORDERING.WHEN YOU ORDER A PART,PLEASE REFER TO PARTS LIST.

NOTE:THE MEASUREMENT MODE OF THE DC VOLTAGE OUT OF THE BRACKETS ON THIS DIAGRAM IS PLAYBACK MODE.
THE MEASUREMENT MODE OF THE DC VOLTAGE IN THE BRACKETS ( ) ON THIS DIAGRAM IS RECORD MODE.(SP MODE)

:VIDEO MAIN SIGNAL PATH

TO MAIN CONNECTION
<TO FP801>
FP801

LCD HD	1
V BLK	2
———	3
E FRP	4
M E PLL	5
E PLL	6
GND	7
EVF 3V	8
GND	9
GND	10
EVF 5V	11
EVF 12V	12
E B OUT	13
E G OUT	14
E R OUT	15
E BL 6V	16
NOREG GND	17
NOREG BND	18

R802 0
R804 0
R811 0
R810 100K
L801 10u
C803 6.3V10
C804 0.1
R809 390K
R801 0
C805 3.3
R806 10K
R807 1K
C806 3300P
C807 0.01
D801 MA338
R808 33K
C809 1000P
L803 10u
C808 20P

IC801
CXD2458AR
(LCD DRIVE)

0.5	-	-	-	-		-		1.5	2.7	2.8	-	
36 HD	35 XCLP	34 SH3	33 SH2	32 SH1	31 VSS	30 SH4	29 FLDO	28 FRP	27 XHD	26 SLNP	25 VD	
-	37 TST3											
-	38 HP4											
0	39 RPD											
	40 VSS											
1.4	41 CKO											
1.4	42 CKI											
2.8	43 VDD											
-	44 TST4											
2.8	45 XVD											
-	46 HP1											
-	47 HP2											
-	48 HP3											

2.8	2.8	0										
1 SLCK	2 PLNT	3 XCLR	4 WIDE	5 SBLK	6 VSS	7 TST0	8 TST1	9 TST2	10 RGT	11 SLTM	12 BLK	
R818 0		C810 0.33										

HCK1	24
HCK2	23
HST1	22
VCK1	21
VCK2	20
VDD	19
VST	18
EN	17
CLR	16
STBY	15
HST2	14
SLFR	13

C816 0.1
R815 1K

R824 12K
R825 4700
R826 15K
R827 10K
R823 10K
C812 1

Q801
XN4601
(POWER CTL)

TO EVF LCD PANEL
FP802

1	COM
2	GREEN
3	RED
4	BLUE
5	BLK
6	H CK1
7	H CK2
8	H ST
9	RGT
10	CLR
11	EN
12	———
13	V CK2
14	V ST
15	VSS
16	VDD

R822 100
R833 100
R834 100
C811 0.1

IC803
TC7SET08FU

IC804
AHC1G04DCK

IC805
AHC1G14DCK

R812 100K
C814 470P
L802 10u
C801 10
R841 100
L881 10u
C802 22

Q881
2SK2055
(FLUORESCENT LAMP DRIVE)

T881
ETJ11K91AM

R881 47K

BL820
VLL0216
FLUORESCENT LAMP

JA3
JA2
JA1

E.V.F.(B) C.B.A.
(VEP28268A)

E.V.F.(A) C.B.A.
(VEP28267A)

NOTE:THE MEASUREMENT MODE OF THE DC VOLTAGE ON THIS DIAGRAM IS STOP MODE.(EVF:ON)

NOTE:DO NOT USE ANY PART NUMBER SHOWN ON THIS SCHEMATIC DIAGRAM FOR ORDERING. WHEN YOU ORDER A PART,PLEASE REFER TO PARTS LIST.

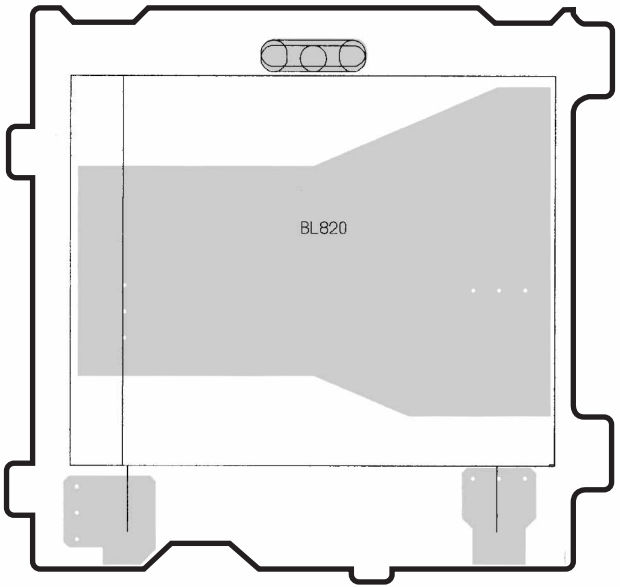

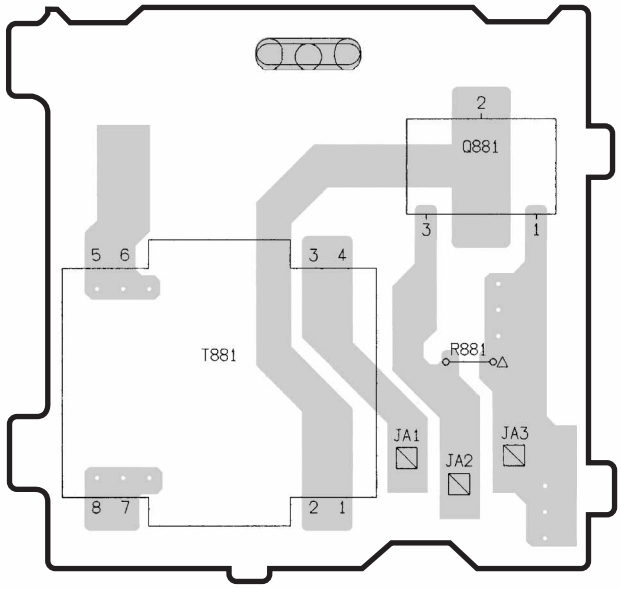

(COMPONENT SIDE) (FOIL SIDE)

B

A

1 2 3

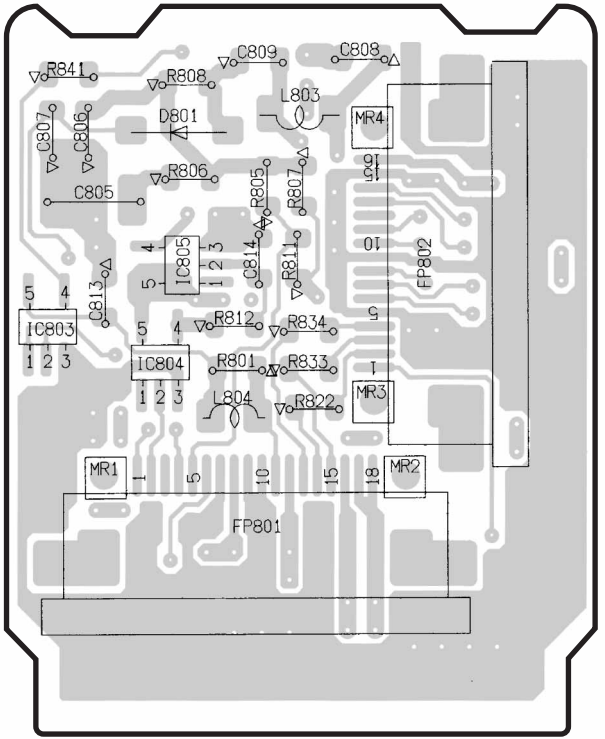

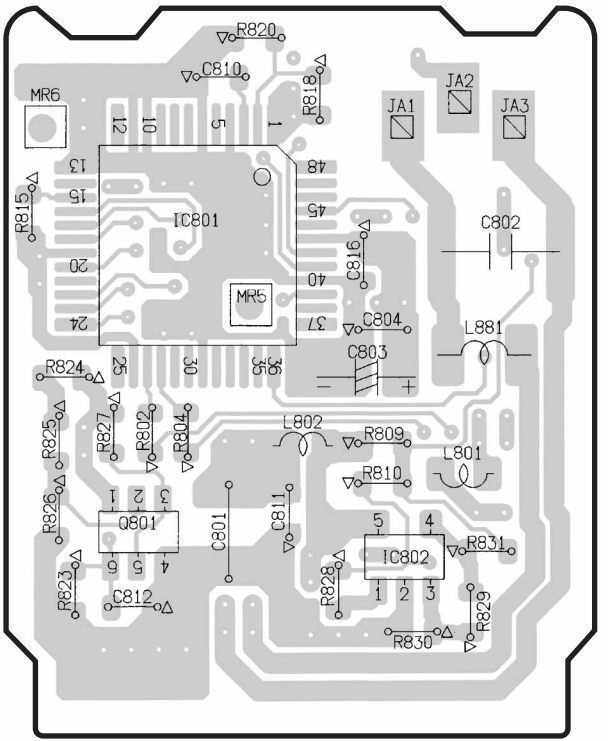

(COMPONENT SIDE) (FOIL SIDE)

B

A

1 2 3

HEAD AMP C.B.A.

Integrated Circuit		Capacitor		C5021	C-2	C5036	B-2	R5015	C-2
IC5001	B-1	C5001	B-1	C5023	C-2	C5037	B-1	R5016	B-2
Transistor		C5002	B-1	C5024	C-2	C5038	B-1	R5017	C-2
Q5002	B-2	C5004	B-1	C5025	C-1	C5039	B-1	R5018	C-1
Q5003	C-1	C5007	B-1	C5026	C-1	C5040	B-1	R5019	C-1
Q5005	B-2	C5010	B-1	C5027	C-1	**Resistor**		R5020	C-1
Q5006	C-2	C5013	B-2	C5028	C-1	R5002	B-1	R5021	C-1
Connector		C5014	B-2	C5029	C-1	R5003	B-1	R5024	B-1
FP5001	C-2	C5015	B-2	C5030	B-1	R5004	B-1	R5025	B-1
Coil		C5016	B-2	C5031	B-1	R5005	B-1	R5026	C-1
L5002	C-2	C5017	B-2	C5032	B-1	R5010	B-2	R5028	B-1
L5003	C-2	C5018	B-2	C5033	B-1	R5012	B-2	R5029	B-1
L5005	B-1	C5019	B-2	C5034	B-1	R5013	B-2		
L5007	B-2	C5020	C-2	C5035	B-2	R5014	C-2		

ADDRESSINFORMATION

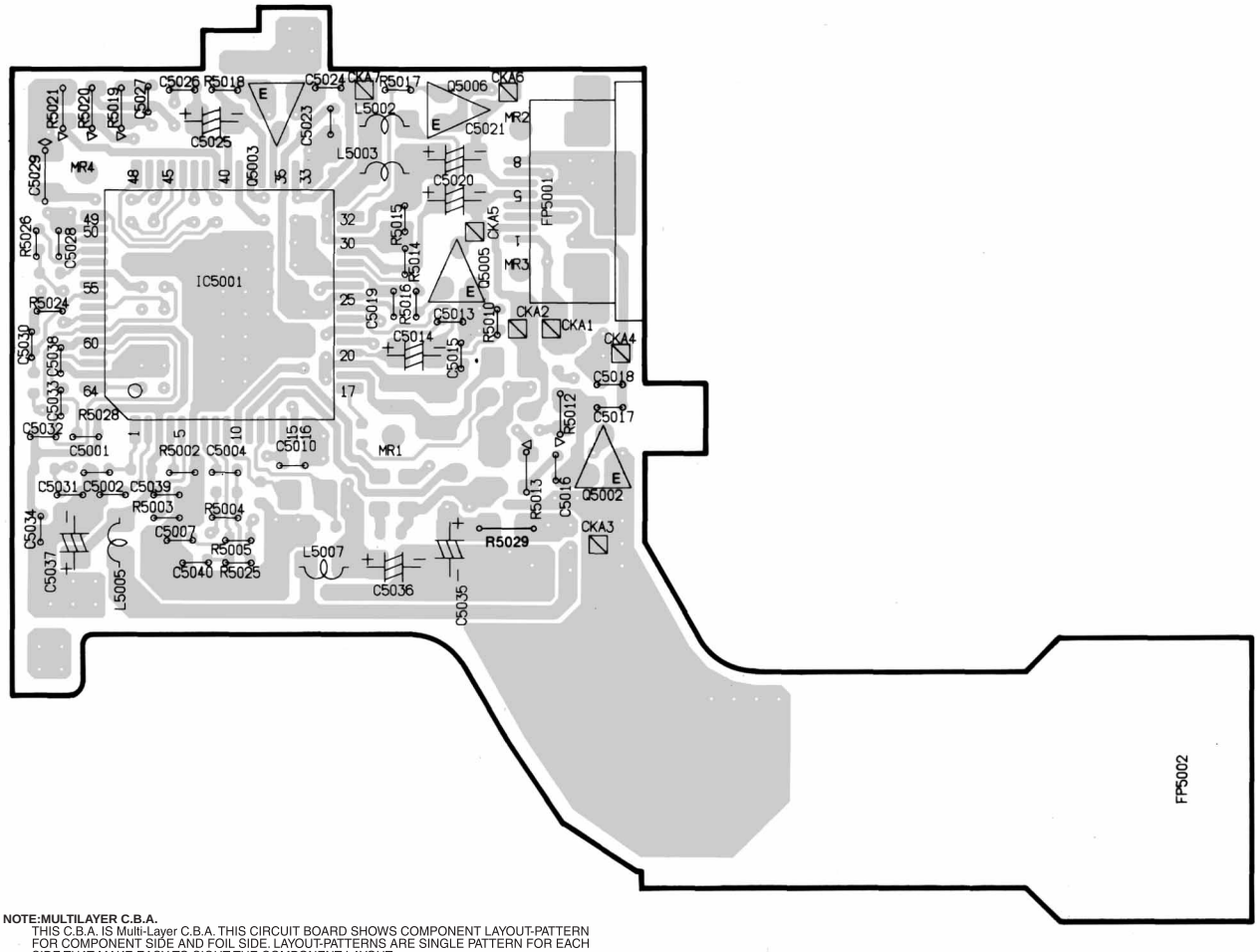

NOTE:MULTILAYER C.B.A.
THIS C.B.A. IS Multi-Layer C.B.A. THIS CIRCUIT BOARD SHOWS COMPONENT LAYOUT-PATTERN FOR COMPONENT SIDE AND FOIL SIDE. LAYOUT-PATTERNS ARE SINGLE PATTERN FOR EACH SIDE THAT MAKE EASY TO SIGHT THE COMPONENT LAYOUT.

C B A

1 2 3 4

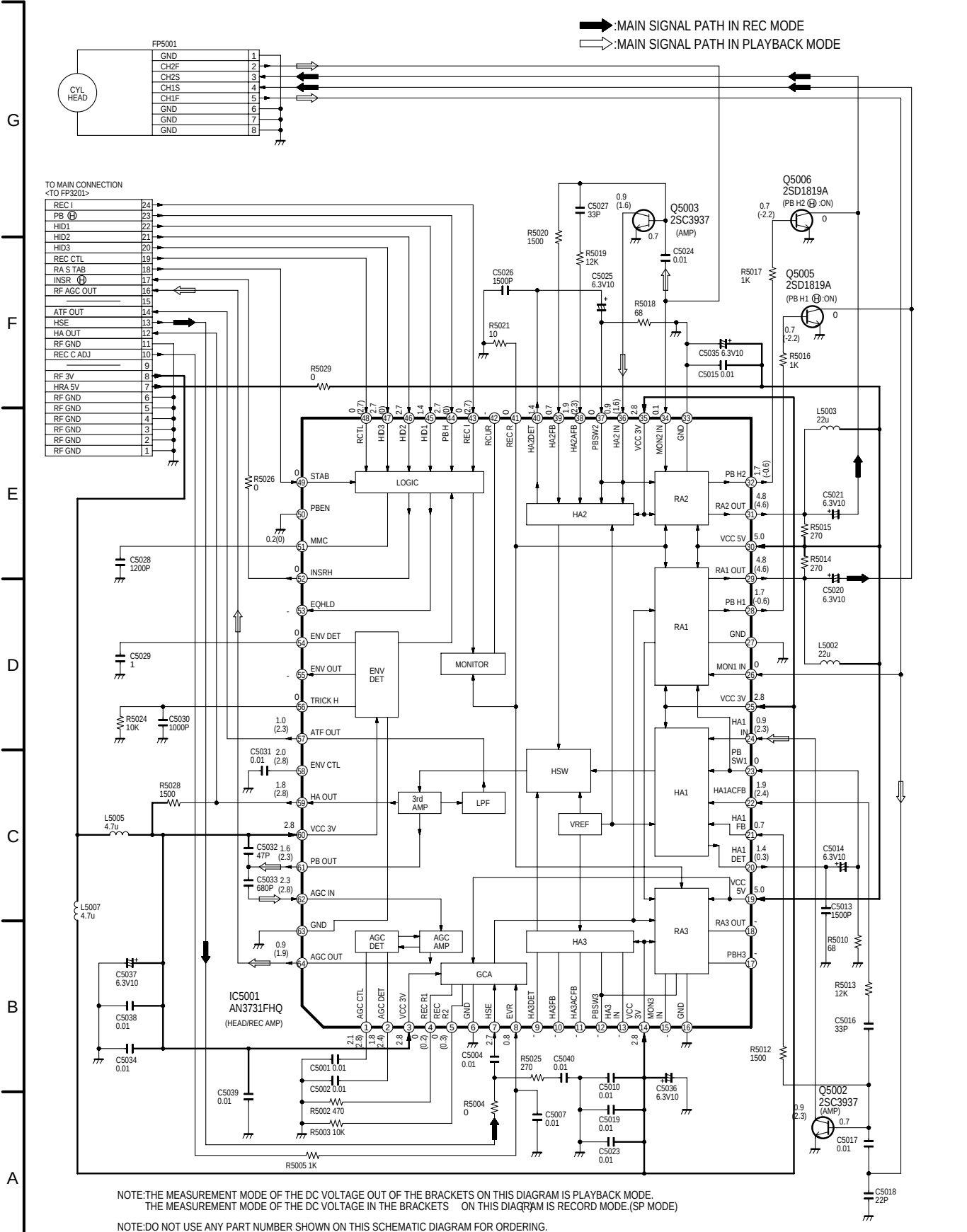

NOTE:THE MEASUREMENT MODE OF THE DC VOLTAGE OUT OF THE BRACKETS ON THIS DIAGRAM IS PLAYBACK MODE.
THE MEASUREMENT MODE OF THE DC VOLTAGE IN THE BRACKETS ON THIS DIAGRAM IS RECORD MODE.(SP MODE)

NOTE:DO NOT USE ANY PART NUMBER SHOWN ON THIS SCHEMATIC DIAGRAM FOR ORDERING.
WHEN YOU ORDER A PART, PLEASE REFER TO PARTS LIST.

CAMERA LENS UNIT

CCD FLEX.
CARD C.B.A.

LENS FLEX. CARD C.B.A.

PS201

1	OUT
2	PW
3	PW
4	PW
5	PW
6	V1
7	V2
8	V3
9	V4
10	SUB
11	-8V
12	-8V
13	H2
14	H2
15	H1
16	H1
17	R
18	R
19	15V
20	15V

FP701

18	LED CTL
17	Z ENC
16	F ENC VCC
15	F ENC
14	ZM T3
13	ZM T2
12	ZM T1
11	ZM T4
10	ALC MAIN(+)
9	ALC MAIN(-)
8	HALL IN(+)
7	HALL OUT(-)
6	HALL OUT(+)
5	HALL IN(-)
4	FM T3
3	FM T2
2	FM T1
1	FM T4

FP3201

REC I	24
PB Ⓗ	23
HID1	22
HID2	21
HID3	20
REC CTL	19
RA S TAB	18
INSR Ⓗ	17
RF AGC OUT	16
	15
ATF OUT	14
HSE	13
HA OUT	12
RF GND	11
REC C ADJ	10
	9
RF 3V	8
HRA 5V	7
RF GND	6
RF GND	5
RF GND	4
RF GND	3
RF GND	2
RF GND	1

FP5001

CH3F	1
CH3S	2
GND	3
CH1F	4
CH1S	5
CH2S	6
CH2F	7
GND	8

HEAD AMP
C.B.A.

MECHA.UNIT

CYL

CAP

FP2004

1	D GND
2	C DOWN
3	MIC VDD
4	MIC DT
5	MIC CLK
6	MIC GND
7	S TAB
8	D GND
9	D GND
10	SOLENOID
11	SOLENOID
12	T PHOTO
13	S 3V
14	T REEL IN
15	S REEL IN
16	D GND
17	S REEL OUT
18	T REEL OUT
19	NOREG GND
20	SNS LED
21	POS3
22	POS2
23	POS1
24	D GND
25	LOAD
26	LOAD
27	UNLOAD
28	UNLOAD
29	S 3V
30	S PHOTO

FP2002

1	M1
2	M1
3	H3(+)
4	VH(+)
5	H3(-)
6	VH(-)
7	VH(-)
8	H1(+)
9	VH(+)
10	H1(-)
11	H2(-)
12	VH(-)
13	H2(+)
14	VH(+)
15	M2
16	M2
17	M3
18	M3
19	VMR
20	AFG1
21	GND
22	AFG2

FP2003

9	M2
8	M2
7	FG(+)
6	FG/PG GND
5	M1
4	M1
3	PG(+)
2	M3
1	M3

DRIVE C.B.A.

PS4802 PP4901

SERIAL DATA	1	1	SERIAL DATA
CR POWER	2	2	CR POWER
D GND	3	3	D GND
D GND	4	4	D GND
D GND	5	5	D GND
D GND	6	6	D GND
A GND	7	7	A GND
A GND	8	8	A GND
A GND	9	9	A GND
A GND	10	10	A GND
AV 4P SW2	11	11	AV 4P SW2
A GND	12	12	A GND
A GND	13	13	A GND
A GND	14	14	A GND
A LCH OUT	15	15	A LCH OUT
A RCH OUT	16	16	A RCH OUT
A GND	17	17	A GND
A GND	18	18	A GND
A GND	19	19	A GND
V OUT	20	20	V OUT
A GND	21	21	A GND
A GND	22	22	A GND
A GND	23	23	A GND
A GND	24	24	A GND
D GND	25	25	D GND
D GND	26	26	D GND
D GND	27	27	D GND
S 5V	28	28	S 5V
S 5V	29	29	S 5V
SERIAL CLK	30	30	SERIAL CLK

J4050

EDIT Ⓔ

J4501

AV OUT

SIDE JACK C.B.A.

FP6002

DEW	1
D GND	2
POWER SW	3
VTR LED	4
CAM/VTR	5
SCAN1	6
CAM LED	7
EJECT	8
ZOOM AD	9
V REF Ⓗ	10
D GND	11
S/S	12
SCAN2	13
PHOTO SHOT	14

FP6701

1	DEW
2	D GND
3	POWER SW
4	VTR LED
5	CAM/VTR
6	SCAN1
7	CAM LED
8	EJECT
9	ZOOM AD
10	V REF Ⓗ
11	D GND
12	S/S
13	SCAN2
14	PHOTO SHOT

FP6702

PHOTO SHOTO	1
SCAN1	2
D GND	3
V REF Ⓗ	4
ZOOM AD	5

- POWER ON/OFF
- RECORDING START/STOP
- CAMERA/VCR
- EJECT
- VCR LED
- CAMERA LED

REAR OPERATION
C.B.A.

ZOOM/PHOTO
SHOTO UNIT

DEW SENSOR

EVF
LCD
PANEL

E.V.F.(B) C.B.A.

FP802

1	COM
2	GREEN
3	RED
4	BLUE
5	BLK
6	H CK1
7	H CK2
8	H ST
9	RGT
10	CLR
11	EN
12	
13	V CK2
14	V ST
15	VSS
16	VDD

FP801

NOREG GND	18
NOREG GND	17
E BL 6V	16
E R OUT	15
E G OUT	14
E B OUT	13
EVF 12V	12
EVF 5V	11
GND	10
GND	9
EVF 3V	8
	7
E PLL	6
M E PLL	5
E FRP	4
	3
V BLK	2
LCD HD	1

FP801

18	NOREG GND
17	NOREG GND
16	E BL 6V
15	E R OUT
14	E G OUT
13	E B OUT
12	EVF 12V
11	EVF 5V
10	GND
9	GND
8	EVF 3V
7	
6	E PLL
5	M E PLL
4	E FRP
3	
2	V BLK
1	LCD HD

E.V.F.(A) C.B.A.

- FLUORESCENT LAMP

PS2001

1	F VPP
2	GND
3	
4	CTL RST
5	
6	
7	
8	
9	
10	
11	
12	
13	
14	
15	
16	S 5V
17	MICON 3V
18	M MOD0
19	M MOD1
20	EEX OD1

MIC

- FOCUS
- TALLY LED
- IR RECEIVER UNIT
- LITHIUM BATTERY

JK4801

MIC JACK

MIC UNIT

FP4801

LI BATT(+)	1
	2
D GND	3
	4
TALLY	5
REMOTE CTL	6
AF/MF	7
S 5V	8
EXT MIC	9
WIND SW Ⓗ	10
REG A5V	11
REG A5V	12
M OUT R	13
M OUT L	14
A GND	15
A GND	16
A GND	17
A GND	18

FP4802

18	LI BATT(+)
17	
16	D GND
15	IR OUT
14	TALLY
13	REMOTE CTL
12	AF/MF
11	S 5V
10	EXT MIC
9	WIND SW Ⓗ
8	REG A5V
7	REG A5V
6	M OUT R
5	M OUT L
4	A GND
3	A GND
2	A GND
1	A GND

MAIN C.B.A.

G F E D C B A

1 2 3 4 5 6 7 8 9 10 11

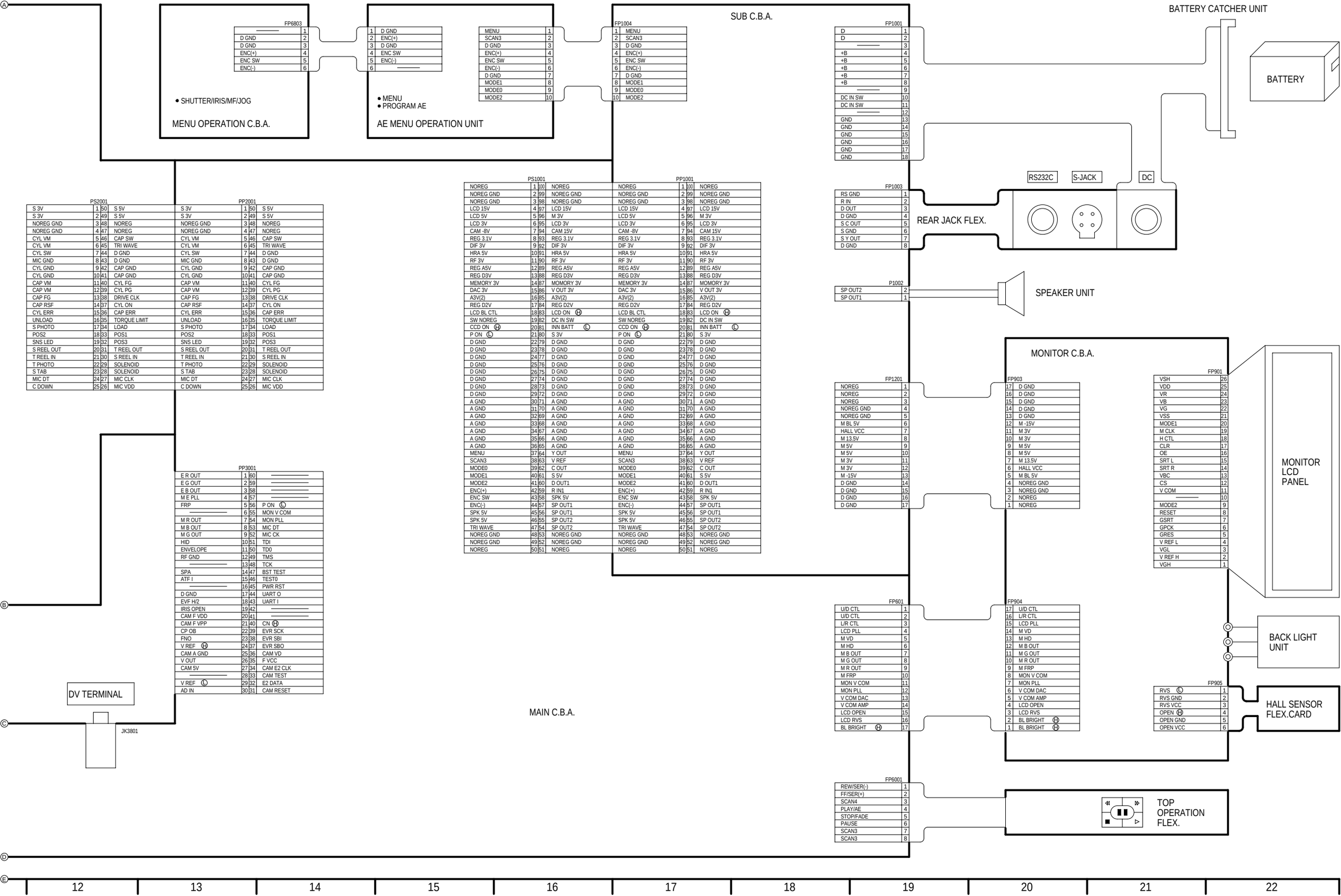
SUB C.B.A.
BATTERY CATCHER UNIT
BATTERY
FP6803
D GND
D GND
ENC(+)
ENC SW
ENC(-)
• SHUTTER/IRIS/MF/JOG
MENU OPERATION C.B.A.
D GND
ENC(+)
D GND
ENC SW
ENC(-)
• MENU
• PROGRAM AE
AE MENU OPERATION UNIT
MENU
SCAN3
D GND
ENC(+)
ENC SW
ENC(-)
D GND
MODE1
MODE0
MODE2
FP1004
MENU
SCAN3
D GND
ENC(+)
ENC SW
ENC(-)
D GND
MODE1
MODE0
MODE2
FP1001
D
D
+B
+B
+B
+B
+B
DC IN SW
DC IN SW
GND
GND
GND
GND
GND
GND
RS232C
S-JACK
DC
REAR JACK FLEX.
FP1003
RS GND
R IN
D OUT
D GND
S C OUT
S GND
S Y OUT
D GND
P1002
SP OUT2
SP OUT1
SPEAKER UNIT
PS2001
S 3V
S 3V
NOREG GND
NOREG GND
CYL VM
CYL VM
CYL SW
MIC GND
CYL GND
CYL GND
CAP VM
CAP VM
CAP FG
CAP RSF
CYL ERR
UNLOAD
S PHOTO
POS2
SNS LED
S REEL OUT
T REEL IN
T PHOTO
S TAB
MIC DT
C DOWN
S 5V
S 5V
NOREG
NOREG
CAP SW
TRI WAVE
D GND
D GND
CAP GND
CAP GND
CYL FG
CYL PG
DRIVE CLK
CYL ON
CAP ERR
TORQUE LIMIT
LOAD
POS1
POS3
T REEL OUT
S REEL IN
SOLENOID
SOLENOID
MIC CLK
MIC VDD
PP2001
S 3V
S 3V
NOREG GND
NOREG GND
CYL VM
CYL VM
CYL SW
MIC GND
CYL GND
CYL GND
CAP VM
CAP VM
CAP FG
CAP RSF
CYL ERR
UNLOAD
S PHOTO
POS2
SNS LED
S REEL OUT
T REEL IN
T PHOTO
S TAB
MIC DT
C DOWN
S 5V
S 5V
NOREG
NOREG
CAP SW
TRI WAVE
D GND
D GND
CAP GND
CAP GND
CYL FG
CYL PG
DRIVE CLK
CYL ON
CAP ERR
TORQUE LIMIT
LOAD
POS1
POS3
T REEL OUT
S REEL IN
SOLENOID
SOLENOID
MIC CLK
MIC VDD
PS1001
NOREG
NOREG GND
NOREG GND
LCD 15V
LCD 5V
LCD 3V
CAM -8V
REG 3.1V
DIF 3V
HRA 5V
RF 3V
REG A5V
REG D3V
MEMORY 3V
DAC 3V
A3V(2)
REG D2V
LCD BL CTL
SW NOREG
CCD ON H
P ON L
D GND
D GND
D GND
D GND
D GND
D GND
D GND
A GND
A GND
A GND
A GND
A GND
A GND
A GND
MENU
SCAN3
MODE0
MODE1
MODE2
ENC(+)
ENC SW
SPK 5V
SPK 5V
TRI WAVE
NOREG GND
NOREG GND
NOREG
NOREG
NOREG GND
NOREG GND
LCD 15V
M 3V
LCD 3V
CAM 15V
REG 3.1V
DIF 3V
HRA 5V
RF 3V
REG A5V
REG D3V
MOMORY 3V
V OUT 3V
A3V(2)
REG D2V
LCD ON H
DC IN SW
ININ BATT L
S 3V
D GND
D GND
D GND
D GND
D GND
D GND
D GND
A GND
A GND
A GND
A GND
A GND
A GND
A GND
Y OUT
V REF
C OUT
S 5V
D OUT1
R IN1
SPK 5V
SP OUT1
SP OUT1
SP OUT2
SP OUT2
NOREG GND
NOREG GND
NOREG
PP1001
NOREG
NOREG GND
NOREG GND
LCD 15V
LCD 5V
LCD 3V
CAM -8V
REG 3.1V
DIF 3V
HRA 5V
RF 3V
REG A5V
REG D3V
MEMORY 3V
DAC 3V
A3V(2)
REG D2V
LCD BL CTL
SW NOREG
CCD ON H
P ON L
D GND
D GND
D GND
D GND
D GND
D GND
D GND
A GND
A GND
A GND
A GND
A GND
A GND
A GND
MENU
SCAN3
MODE0
MODE1
MODE2
ENC(-)
ENC SW
SPK 5V
SPK 5V
TRI WAVE
NOREG GND
NOREG GND
NOREG
NOREG
NOREG GND
NOREG GND
LCD 15V
M 3V
LCD 3V
CAM 15V
REG 3.1V
DIF 3V
HRA 5V
RF 3V
REG A5V
REG D3V
MOMORY 3V
V OUT 3V
A3V(2)
REG D2V
LCD ON H
DC IN SW
ININ BATT L
S 3V
D GND
D GND
D GND
D GND
D GND
D GND
D GND
A GND
A GND
A GND
A GND
A GND
A GND
A GND
Y OUT
V REF
C OUT
S 5V
D OUT1
R IN1
SPK 5V
SP OUT1
SP OUT1
SP OUT2
SP OUT2
NOREG GND
NOREG GND
NOREG
MONITOR C.B.A.
FP1201
NOREG
NOREG
NOREG
NOREG GND
NOREG GND
M BL 5V
HALL VCC
M 13.5V
M 5V
M 5V
M 3V
M 3V
M -15V
D GND
D GND
D GND
FP903
D GND
D GND
D GND
D GND
D GND
M -15V
M 3V
M 3V
M 5V
M 5V
M 13.5V
HALL VCC
M BL 5V
NOREG GND
NOREG GND
NOREG
NOREG
FP901
VSH
VDD
VR
VB
VG
VSS
MODE1
M CLK
H CTL
CLR
OE
SRT L
SRT R
VBC
CS
V COM
MODE2
RESET
GSRT
GPCK
GRES
V REF L
VGL
V REF H
VGH
MONITOR LCD PANEL
PP3001
E R OUT
E G OUT
E B OUT
M E PLL
FRP
M R OUT
M B OUT
M G OUT
HID
ENVELOPE
RF GND
SPA
ATF I
D GND
EVF H/2
IRIS OPEN
CAM F VDD
CAM F VPP
CP OB
FNO
V REF H
CAM A GND
V OUT
CAM 5V
V REF L
AD IN
P ON L
MON V COM
MON PLL
MIC DT
MIC CK
TDI
TD0
TMS
TCK
BST TEST
TEST0
PWR RST
UART O
UART I
CN H
EVR SCK
EVR SBI
EVR SBO
CAM VD
F VCC
CAM E2 CLK
CAM TEST
E2 DATA
CAM RESET
DV TERMINAL
JK3801
MAIN C.B.A.
FP601
U/D CTL
U/D CTL
L/R CTL
LCD PLL
M VD
M HD
M B OUT
M G OUT
M R OUT
M FRP
MON V COM
MON PLL
V COM DAC
V COM AMP
LCD OPEN
LCD RVS
BL BRIGHT H
FP904
U/D CTL
U/R CTL
LCD PLL
M VD
M HD
M B OUT
M G OUT
M R OUT
M FRP
MON V COM
MON PLL
V COM DAC
V COM AMP
LCD OPEN
LCD RVS
BL BRIGHT H
BL BRIGHT H
BACK LIGHT UNIT
FP905
RVS L
RVS GND
RVS VCC
OPEN H
OPEN GND
OPEN VCC
HALL SENSOR FLEX.CARD
FP6001
REW/SER(-)
FF/SER(+)
SCAN4
PLAY/AE
STOP/FADE
PAUSE
SCAN3
SCAN3
TOP OPERATION FLEX.
A
B
C
D
E
12
13
14
15
16
17
18
19
20
21
22

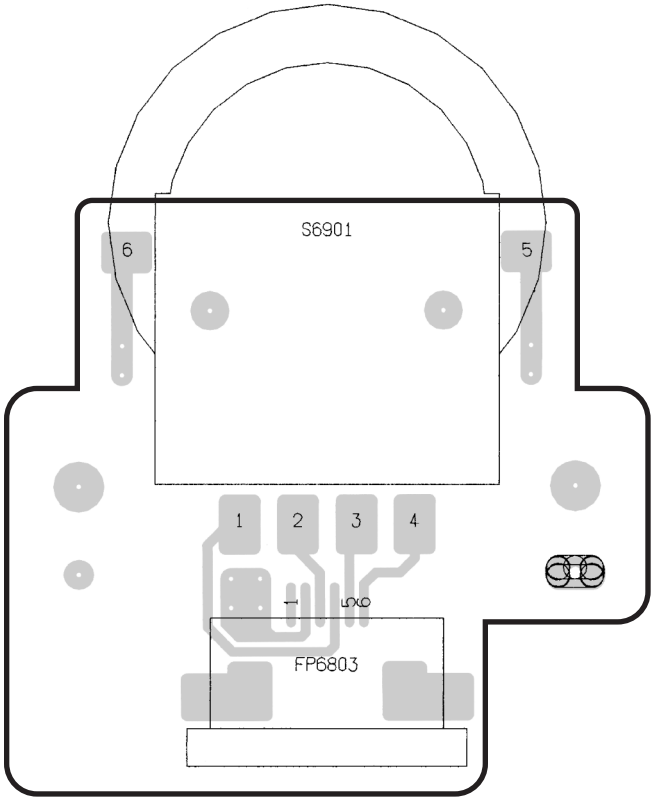

NOTE:MULTILAYER C.B.A.

THIS C.B.A. IS Multi-Layer C.B.A. THIS CIRCUIT BOARD SHOWS COMPONENT LAYOUT-PATTERN FOR COMPONENT SIDE AND FOIL SIDE. LAYOUT-PATTERNS ARE SINGLE PATTERN FOR EACH SIDE THAT MAKE EASY TO SIGHT THE COMPONENT LAYOUT.

B

A

1

2

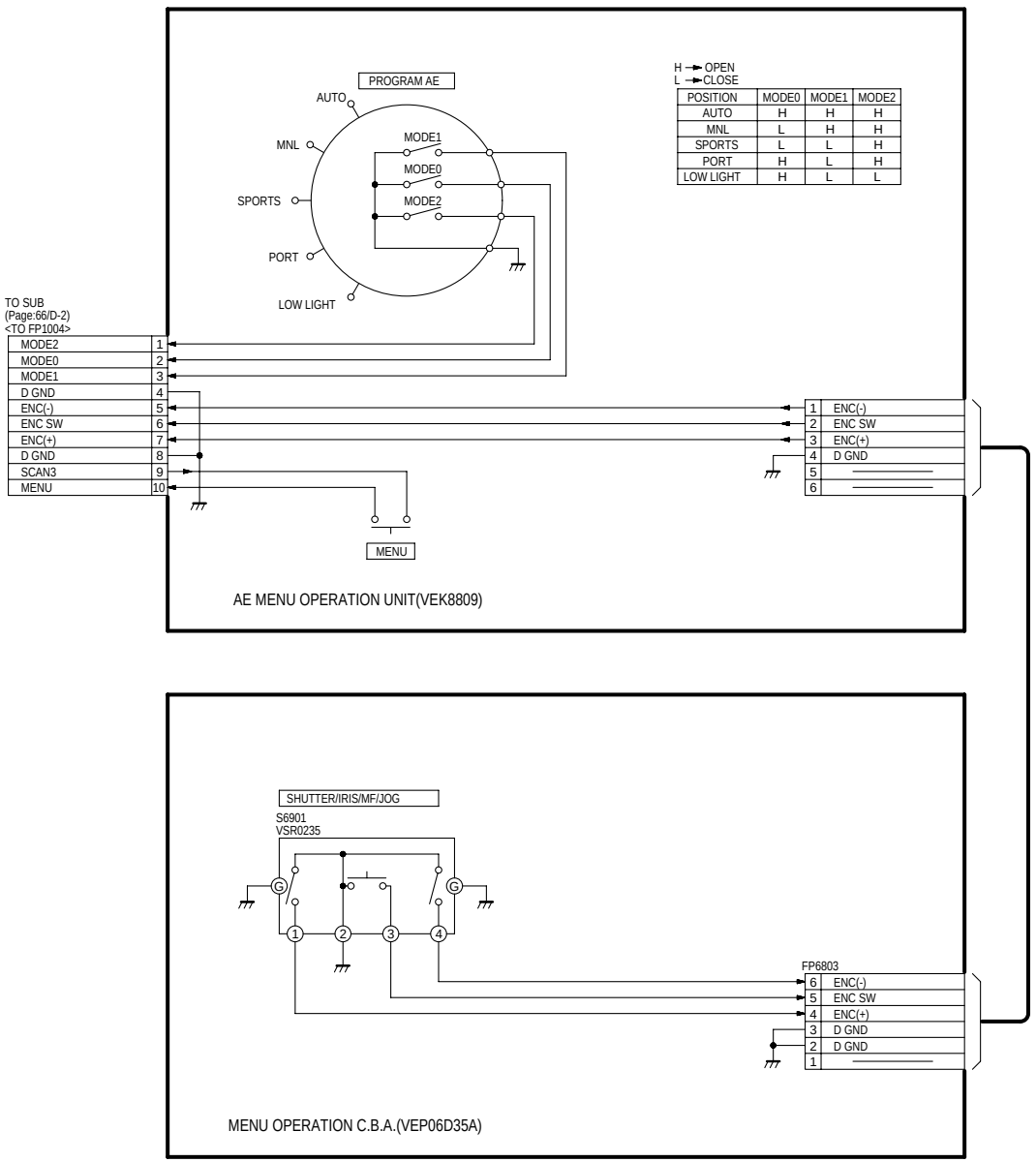

NOTE:DO NOT USE ANY PART NUMBER SHOWN ON THIS SCHEMATIC DIAGRAM FOR ORDERING.WHEN YOU ORDER A PART,PLEASE REFER TO PARTS LIST.

MIC UNIT

Integrated Circuit		Q4905	B-5	B6801	A-4	Test Point		C4806	C-3	C4905	B-3	C6401	B-4	R4809	B-4	R4861	B-4	R4908	C-2	R4918	C-2	R4930	B-2
IC4801	B-4	Q4906	B-1	Diode		TL4801	C-5	C4807	C-5	C4908	C-2	C6402	B-4	R4810	C-4	R4864	B-2	R4909	C-2	R4919	B-5	R6801	A-4
Transistor		Q4907	B-5	D6801	A-2	TL4802	B-4	C4808	B-4	C4910	B-3	Resistor		R4811	C-4	R4898	B-2	R4910	C-3	R4920	B-1	R6803	A-4
Q4805	C-5	Transistor & Resistor		IR		TL4803	B-5	C4809	B-4	C4911	B-5	R4801	C-4	R4812	B-4	R4899	B-4	R4911	C-3	R4921	C-5		
Q4810	B-4	QR4903	B-4	IR6401	A-3	TL4804	B-5	C4814	B-4	C4912	B-1	R4802	C-5	R4814	B-4	R4901	C-2	R4912	C-2	R4922	C-5		
Q4811	B-3	QR4904	B-2	Coil		Capacitor		C4816	B-3	C4913	B-4	R4803	C-4	R4815	B-4	R4902	C-2	R4913	C-2	R4924	B-4		
Q4901	C-2	Connector		L6401	B-4	C4801	C-4	C4817	B-3	C4914	B-4	R4805	C-4	R4816	B-3	R4904	B-1	R4914	C-2	R4925	B-4		
Q4902	C-3	FP4801	B-5	LB4901	C-5	C4802	C-4	C4901	C-2	C4915	B-4	R4806	C-4	R4818	B-3	R4905	C-2	R4915	C-2	R4926	B-4		
Q4903	C-2	JK4801	C-1	Switch		C4804	C-4	C4902	C-2	C4916	B-3	R4807	C-4	R4823	B-3	R4906	C-2	R4916	C-2	R4928	B-2		
Q4904	C-3	Battery		S6801	A-3	C4805	C-4	C4903	C-2	C4917	B-2	R4808	C-4	R4824	B-3	R4907	C-2	R4917	B-2	R4929	B-2		

ADDRESSINFORMATION

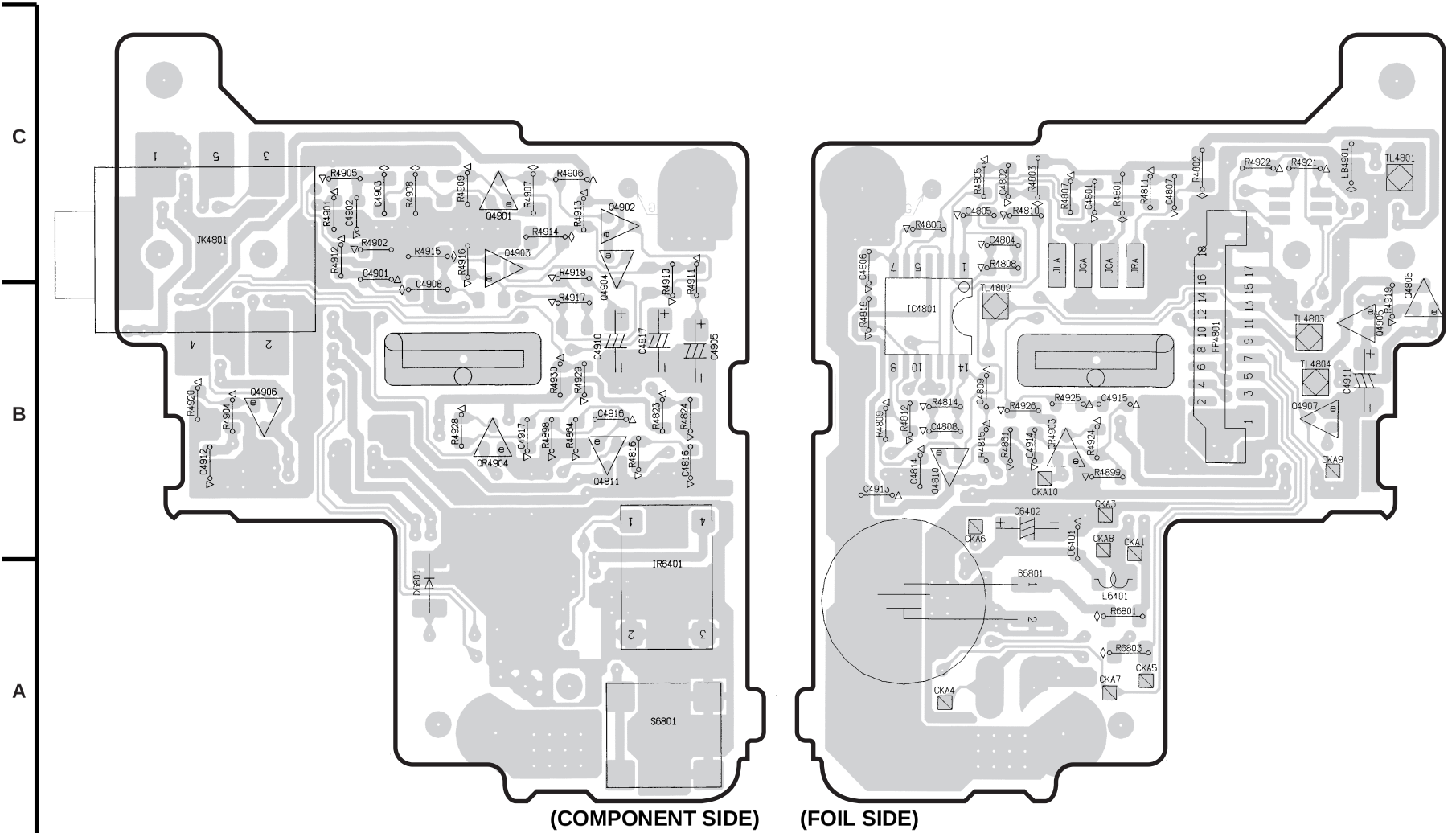

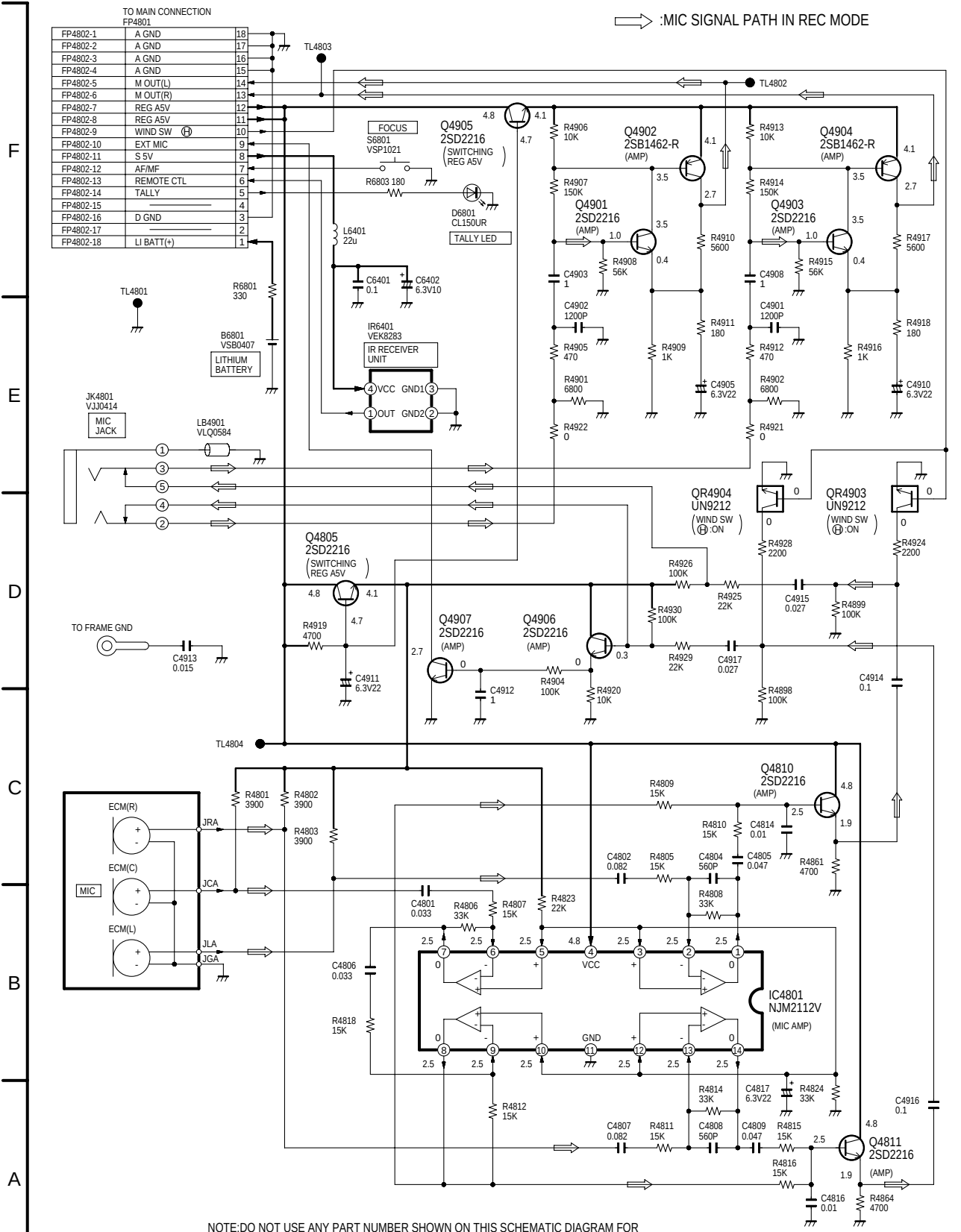
:MIC SIGNAL PATH IN REC MODE
TO MAIN CONNECTION FP4801
FP4802-1 A GND 18
FP4802-2 A GND 17
FP4802-3 A GND 16
FP4802-4 A GND 15
FP4802-5 M OUT(L) 14
FP4802-6 M OUT(R) 13
FP4802-7 REG A5V 12
FP4802-8 REG A5V 11
FP4802-9 WIND SW (H) 10
FP4802-10 EXT MIC 9
FP4802-11 S 5V 8
FP4802-12 AF/MF 7
FP4802-13 REMOTE CTL 6
FP4802-14 TALLY 5
FP4802-15 4
FP4802-16 D GND 3
FP4802-17 2
FP4802-18 LI BATT(+) 1
TL4803
TL4802
TL4801
TL4804
FOCUS
S6801 VSP1021
R6803 180
D6801 CL150UR
TALLY LED
L6401 22u
C6401 0.1
C6402 6.3V10
R6801 330
B6801 VSB0407
LITHIUM BATTERY
IR6401 VEK8283
IR RECEIVER UNIT
VCC GND1 OUT GND2
JK4801 VJJ0414
MIC JACK
LB4901 VLQ0584
TO FRAME GND
C4913 0.015
Q4905 2SD2216 (SWITCHING REG A5V)
Q4902 2SB1462-R (AMP)
Q4904 2SB1462-R (AMP)
Q4901 2SD2216 (AMP)
Q4903 2SD2216 (AMP)
R4906 10K
R4907 150K
R4908 56K
R4910 5600
R4911 180
R4909 1K
R4905 470
R4901 6800
R4922 0
C4903 1
C4902 1200P
C4905 6.3V22
R4913 10K
R4914 150K
R4915 56K
R4917 5600
R4918 180
R4916 1K
C4908 1
C4901 1200P
C4910 6.3V22
R4912 470
R4902 6800
R4921 0
QR4904 UN9212 (WIND SW (H):ON)
QR4903 UN9212 (WIND SW (H):ON)
R4928 2200
R4924 2200
Q4805 2SD2216 (SWITCHING REG A5V)
Q4907 2SD2216 (AMP)
Q4906 2SD2216 (AMP)
R4926 100K
R4925 22K
C4915 0.027
R4899 100K
R4930 100K
R4929 22K
C4917 0.027
R4919 4700
C4911 6.3V22
C4912 1
R4904 100K
R4920 10K
R4898 100K
C4914 0.1
Q4810 2SD2216 (AMP)
R4809 15K
R4810 15K
C4814 0.01
R4861 4700
C4802 0.082
R4805 15K
C4804 560P
C4805 0.047
R4808 33K
C4801 0.033
R4806 33K
R4807 15K
R4823 22K
R4801 3900
R4802 3900
R4803 3900
ECM(R)
ECM(C)
ECM(L)
MIC
JRA
JCA
JLA
JGA
C4806 0.033
R4818 15K
IC4801 NJM2112V (MIC AMP)
R4812 15K
R4814 33K
C4817 6.3V22
R4824 33K
C4916 0.1
C4807 0.082
R4811 15K
C4808 560P
C4809 0.047
R4815 15K
R4816 15K
Q4811 2SD2216 (AMP)
C4816 0.01
R4864 4700
NOTE:DO NOT USE ANY PART NUMBER SHOWN ON THIS SCHEMATIC DIAGRAM FOR ORDERING.WHEN YOU ORDER A PART,PLEASE REFER TO PARTS LIST.
NOTE:THE MEASUREMENT MODE OF THE DC VOLTAGE ON THIS DIAGRAM IS RECORD MODE.
F
E
D
C
B
A
1
2
3
4
5

NOTE:MULTILAYER C.B.A.

THIS C.B.A. IS Multi-Layer C.B.A. THIS CIRCUIT BOARD SHOWS COMPONENT LAYOUT-PATTERN FOR COMPONENT SIDE AND FOIL SIDE. LAYOUT-PATTERNS ARE SINGLE PATTERN FOR EACH SIDE THAT MAKE EASY TO SIGHT THE COMPONENT LAYOUT.

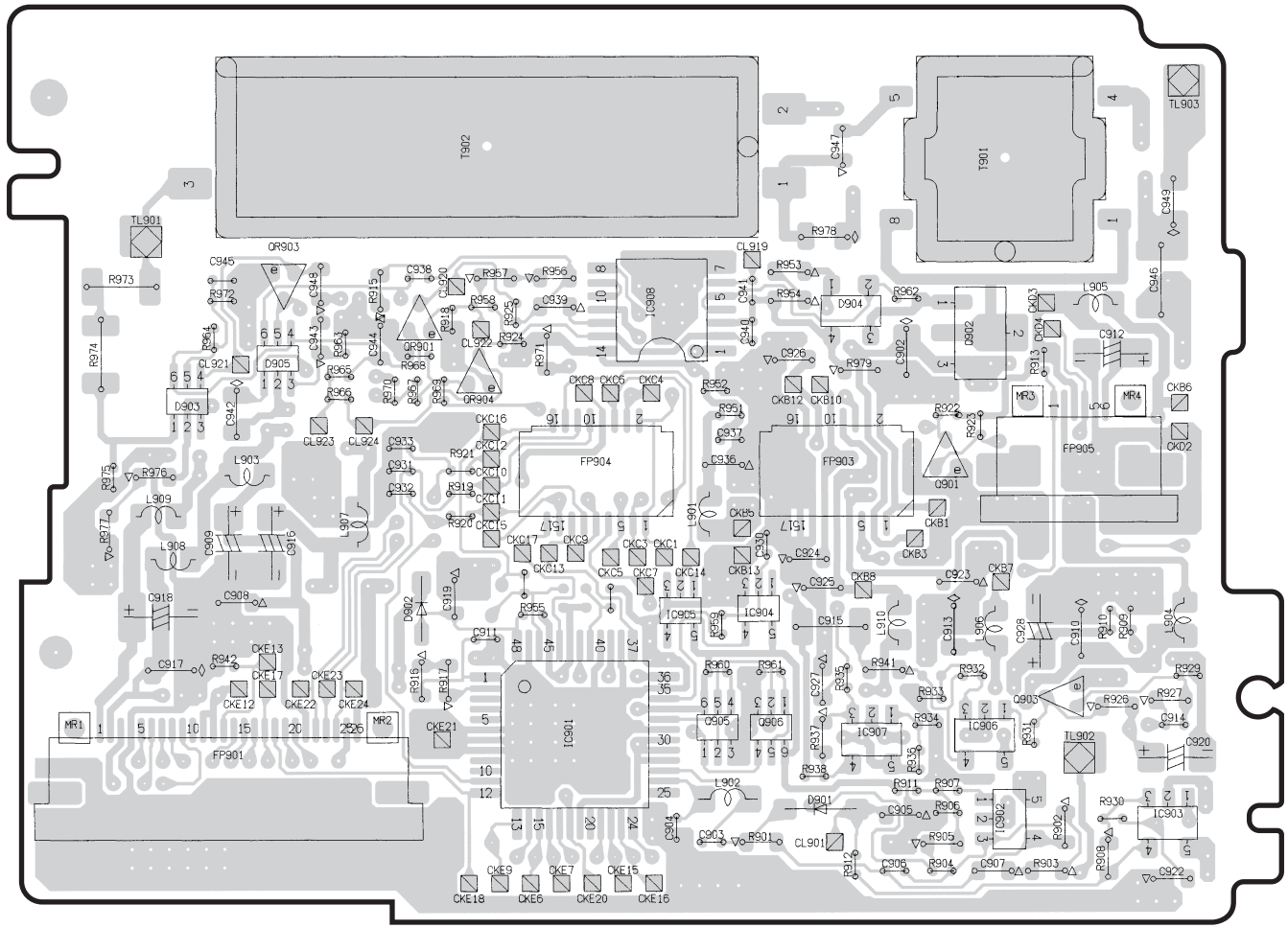

MONITOR C.B.A.					
Integrated Circuit		C903	A-3	R915	C-2
IC901	A-2	C904	A-3	R916	A-2
IC902	A-4	C905	A-3	R917	A-2
IC903	A-4	C906	A-3	R918	B-2
IC904	B-3	C907	A-4	R919	B-2
IC905	B-3	C908	B-1	R920	B-2
IC906	A-4	C909	B-1	R921	B-2
IC907	A-3	C910	A-4	R922	B-3
IC908	C-3	C911	B-2	R923	B-4
Transistor		C912	B-4	R924	B-2
Q901	B-3	C913	B-3	R925	B-2
Q902	B-4	C914	A-4	R926	A-4
Q903	A-4	C915	B-3	R927	A-4
Q905	A-3	C916	B-1	R929	A-4
Q906	A-3	C917	A-1	R930	A-4
Transistor & Resistor		C918	B-1	R931	A-4
QR901	B-2	C919	B-2	R932	A-4
QR903	C-1	C920	A-4	R933	A-3
QR904	B-2	C922	A-4	R934	A-3
Connector		C923	B-4	R935	A-3
FP901	A-1	C924	B-3	R936	A-3
FP903	B-3	C925	B-3	R937	A-3
FP904	B-2	C926	B-3	R938	A-3
FP905	B-4	C927	A-3	R941	A-3
Diode		C928	B-4	R942	A-1
D901	A-3	C930	B-3	R951	B-3
D902	B-2	C931	B-2	R952	B-3
D903	B-1	C932	B-2	R953	C-3
D904	C-3	C933	B-2	R954	C-3
D905	B-1	C936	B-3	R955	B-2
Coil		C937	B-3	R956	C-2
L901	B-3	C938	C-2	R957	C-2
L902	A-3	C939	C-2	R958	C-2
L903	B-1	C940	B-3	R959	B-3
L904	B-4	C941	C-3	R960	A-3
L905	C-4	C942	B-1	R961	A-3
L906	B-4	C943	B-2	R962	C-3
L907	B-2	C944	B-2	R963	B-2
L908	B-1	C945	C-1	R964	B-1
L909	B-1	C946	C-4	R965	B-2
L910	B-3	C947	C-3	R966	B-2
Transformer		C948	C-2	R967	B-2
T901	C-4	C949	C-4	R968	B-2
T902	C-2	**Resistor**		R969	B-2
Test Point		R901	A-3	R970	B-2
CL901	A-3	R902	A-4	R971	B-2
CL919	C-3	R903	A-4	R972	C-1
CL920	C-2	R904	A-3	R973	C-1
CL921	B-1	R905	A-3	R974	B-1
CL922	B-2	R906	A-3	R975	B-1
CL923	B-2	R907	A-3	R976	B-1
CL924	B-2	R908	A-4	R977	B-1
TL901	C-1	R909	B-4	R978	C-3
TL902	A-4	R910	B-4	R979	B-3
TL903	C-4	R911	A-3		
Capacitor		R912	A-3		
C902	B-3	R913	B-4		

ADDRESSINFORMATION

:VIDEO MAIN SIGNAL PATH

TO MONITOR LCD PANEL
FP901
VGH 1
V REF H 2
VGL 3
V REF L 4
GRES 5
GPCK 6
GSRT 7
RESET 8
MODE2 9
10
V COM 11
CS 12
VBC 13
SRT R 14
SRT L 15
OE 16
CLR 17
H CTL 18
M CLK 19
MODE1 20
VSS 21
VG 22
VB 23
VR 24
VDD 25
VSH 26

TO SUB
(Page:66/C-2)
FP903
NOREG 1
NOREG 2
NOREG GND 3
NOREG GND 4
M BL 5V 5
HALL VCC 6
M 13.5V 7
M 5V 8
M 5V 9
M 3V 10
M 3V 11
M -15V 12
D GND 13
D GND 14
D GND 15
D GND 16
D GND 17

FP1201-1
FP1201-2
FP1201-3
FP1201-4
FP1201-5
FP1201-6
FP1201-7
FP1201-8
FP1201-9
FP1201-10
FP1201-11
FP1201-12
FP1201-13
FP1201-14
FP1201-15
FP1201-17
FP1201-18

TO MAIN CONNECTION
FP904
BL BRIGHT (H) 1
BL BRIGHT (H) 2
LCD RVS 3
LCD OPEN 4
V COM AMP 5
V COM DAC 6
MON PLL 7
MON V COM 8
M FRP 9
M R OUT 10
M G OUT 11
M B OUT 12
M HD 13
M VD 14
LCD PLL 15
L/R CTL 16
U/D CTL 17

FP601-17
FP601-16
FP601-15
FP601-14
FP601-13
FP601-12
FP601-11
FP601-10
FP601-9
FP601-8
FP601-7
FP601-6
FP601-5
FP601-4
FP601-3
FP601-2
FP601-1

FP905
RVS (L) 1
RVS GND 2
RVS VCC 3
OPEN (H) 4
OPEN GND 5
OPEN VCC 6

HALL SENSOR FLEX.CARD
(VEP06C60A)

NOTE:DO NOT USE ANY PART NUMBER SHOWN ON THIS SCHEMATIC DIAGRAM FOR ORDERING. WHEN YOU ORDER A PART,PLEASE REFER TO PARTS LIST.

NOTE:THE MEASUREMENT MODE OF THE DC VOLTAGE ON THIS DIAGRAM IS STOP MODE.(MONITOR:OPEN)

IC901
CM7018L3
(LCD DRIVE)

IC903
TA75S558F

IC902
TA75S558F

IC907
TA75S558F

IC906
TA75S558F

IC905
AHC1G14DCK

IC904
AHC1G14DCK

IC908
SN74LV04APW

IC992
DN8797MS

IC991
DN8797MS

Q906
XP4601
(AMP)

Q905
XP4601
(AMP)

Q903
2SD2216
(INV.)

Q901
2SD2216
(OPEN (H):ON)

Q902
2SK2159
(BACK LIGHT DRIVE)

QR901
UN9210J
(SWITCHING)

QR903
UN9214J
(INV.)

QR904
UN9210J
(BL BRIGHT (H):ON)

D901 MA329
D902 MA111
D903 MA6S121
D904 MA159A
D905 MA6S121

T901 ETJ09K49AZ
T902 EFTU21R202

CL901
CL919
CL920
CL921
CL922
CL923
CL924

TL901
TL902
TL903

TO BACK LIGHT UNIT

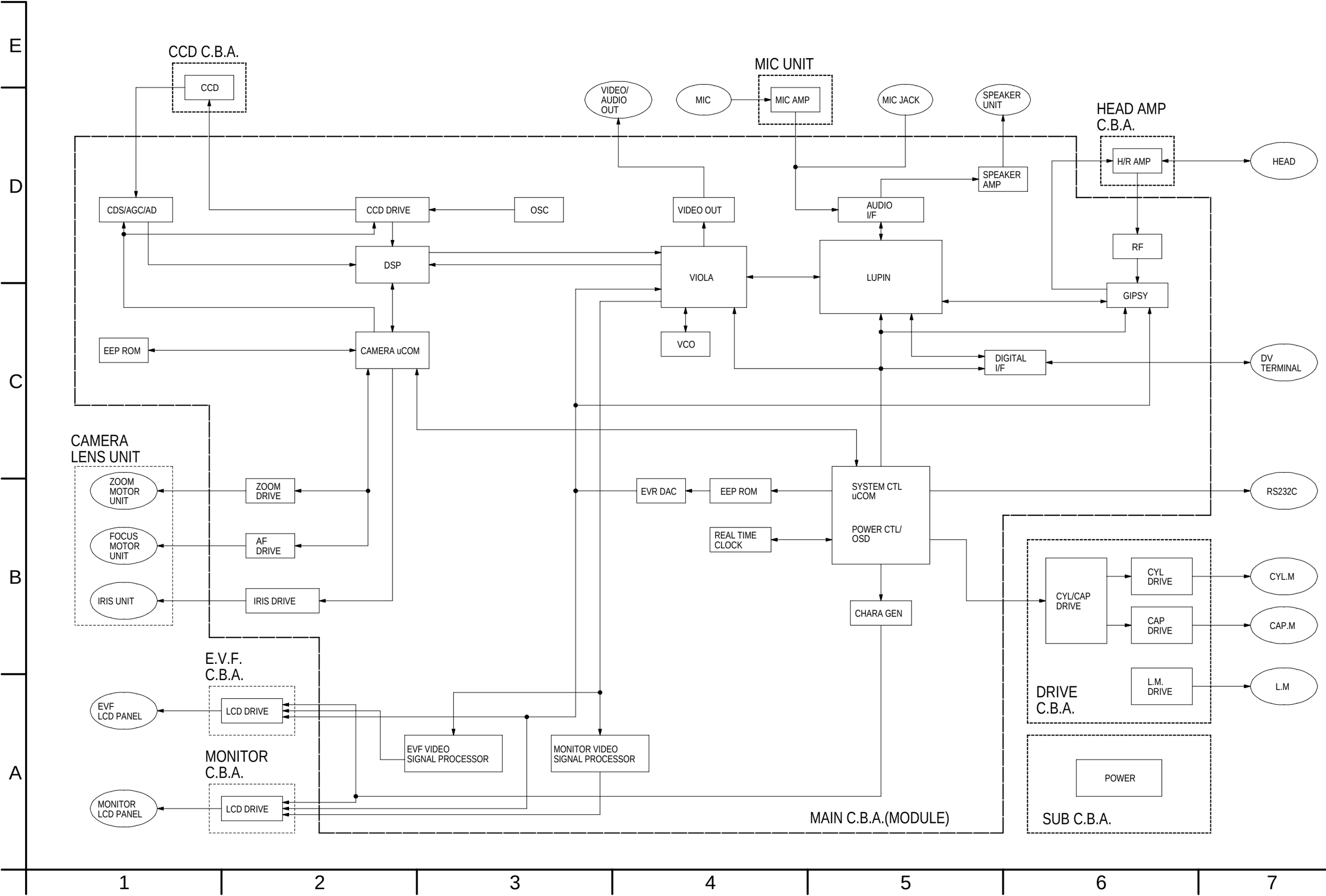
CCD C.B.A.
CCD
MIC UNIT
VIDEO/
AUDIO
OUT
MIC
MIC AMP
MIC JACK
SPEAKER
UNIT
HEAD AMP
C.B.A.
H/R AMP
HEAD
SPEAKER
AMP
CDS/AGC/AD
CCD DRIVE
OSC
VIDEO OUT
AUDIO
I/F
RF
DSP
VIOLA
LUPIN
GIPSY
EEP ROM
CAMERA uCOM
VCO
DIGITAL
I/F
DV
TERMINAL
CAMERA
LENS UNIT
ZOOM
MOTOR
UNIT
ZOOM
DRIVE
EVR DAC
EEP ROM
SYSTEM CTL
uCOM
RS232C
FOCUS
MOTOR
UNIT
AF
DRIVE
REAL TIME
CLOCK
POWER CTL/
OSD
CYL
DRIVE
CYL.M
CYL/CAP
DRIVE
CAP
DRIVE
CAP.M
IRIS UNIT
IRIS DRIVE
CHARA GEN
L.M.
DRIVE
L.M
DRIVE
C.B.A.
E.V.F.
C.B.A.
EVF
LCD PANEL
LCD DRIVE
EVF VIDEO
SIGNAL PROCESSOR
MONITOR VIDEO
SIGNAL PROCESSOR
MONITOR
C.B.A.
POWER
MONITOR
LCD PANEL
LCD DRIVE
MAIN C.B.A.(MODULE)
SUB C.B.A.
E
D
C
B
A
1
2
3
4
5
6
7

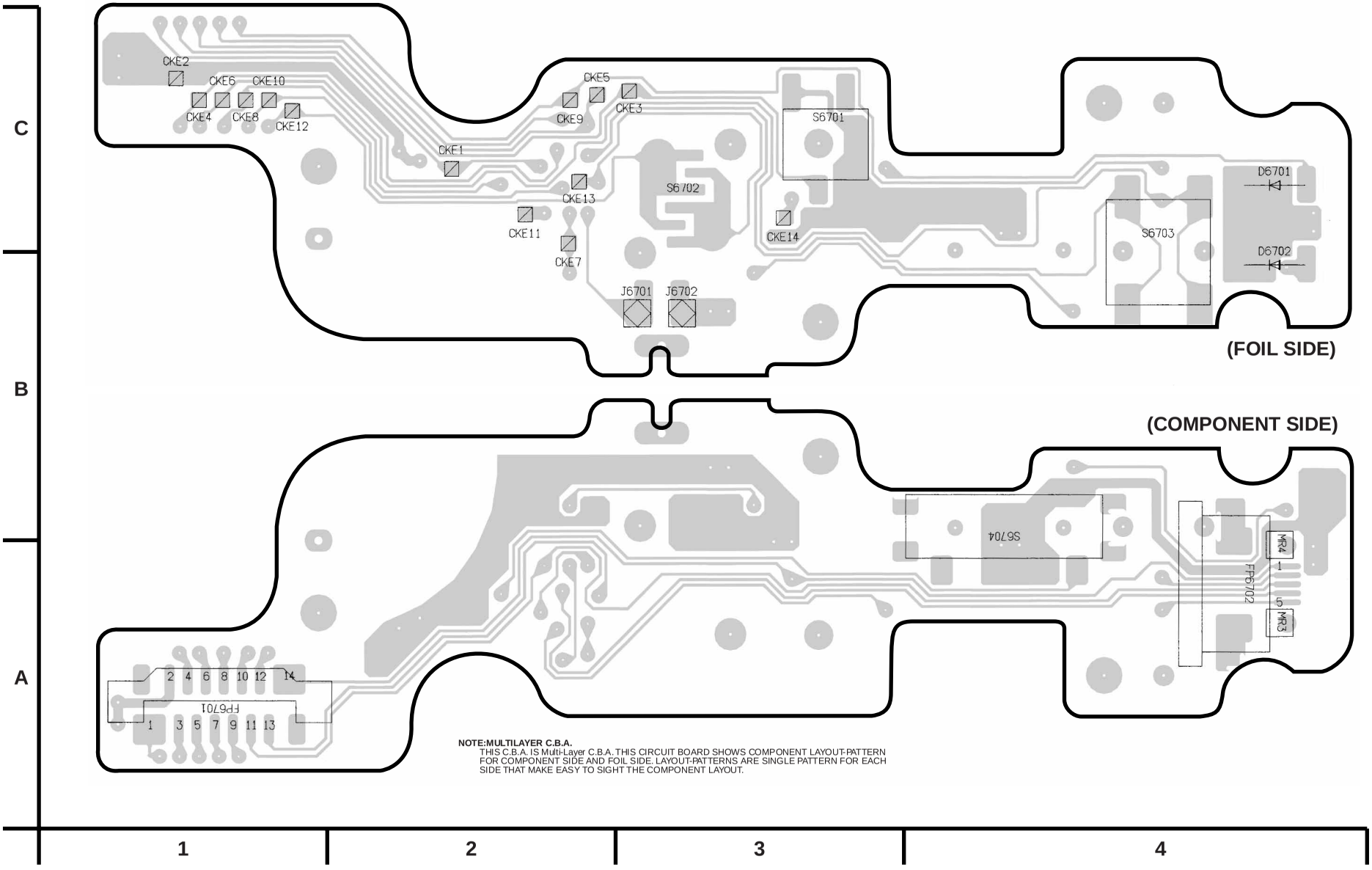

NOTE:MULTILAYER C.B.A.
THIS C.B.A. IS Multi-Layer C.B.A. THIS CIRCUIT BOARD SHOWS COMPONENT LAYOUT-PATTERN FOR COMPONENT SIDE AND FOIL SIDE. LAYOUT-PATTERNS ARE SINGLE PATTERN FOR EACH SIDE THAT MAKE EASY TO SIGHT THE COMPONENT LAYOUT.

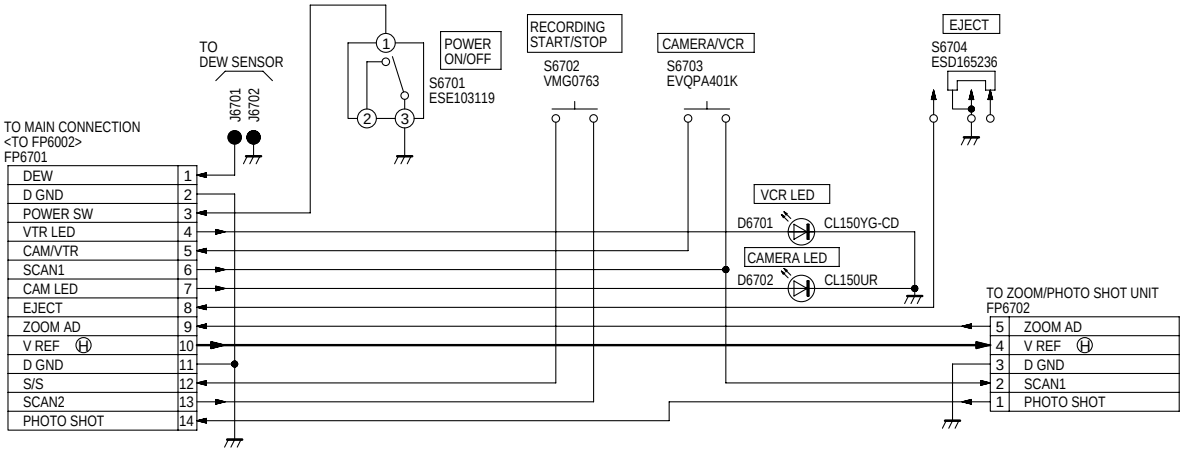

NOTE:DO NOT USE ANY PART NUMBER SHOWN ON THIS SCHEMATIC DIAGRAM FOR ORDERING.WHEN YOU ORDER A PART,PLEASE REFER TO PARTS LIST.

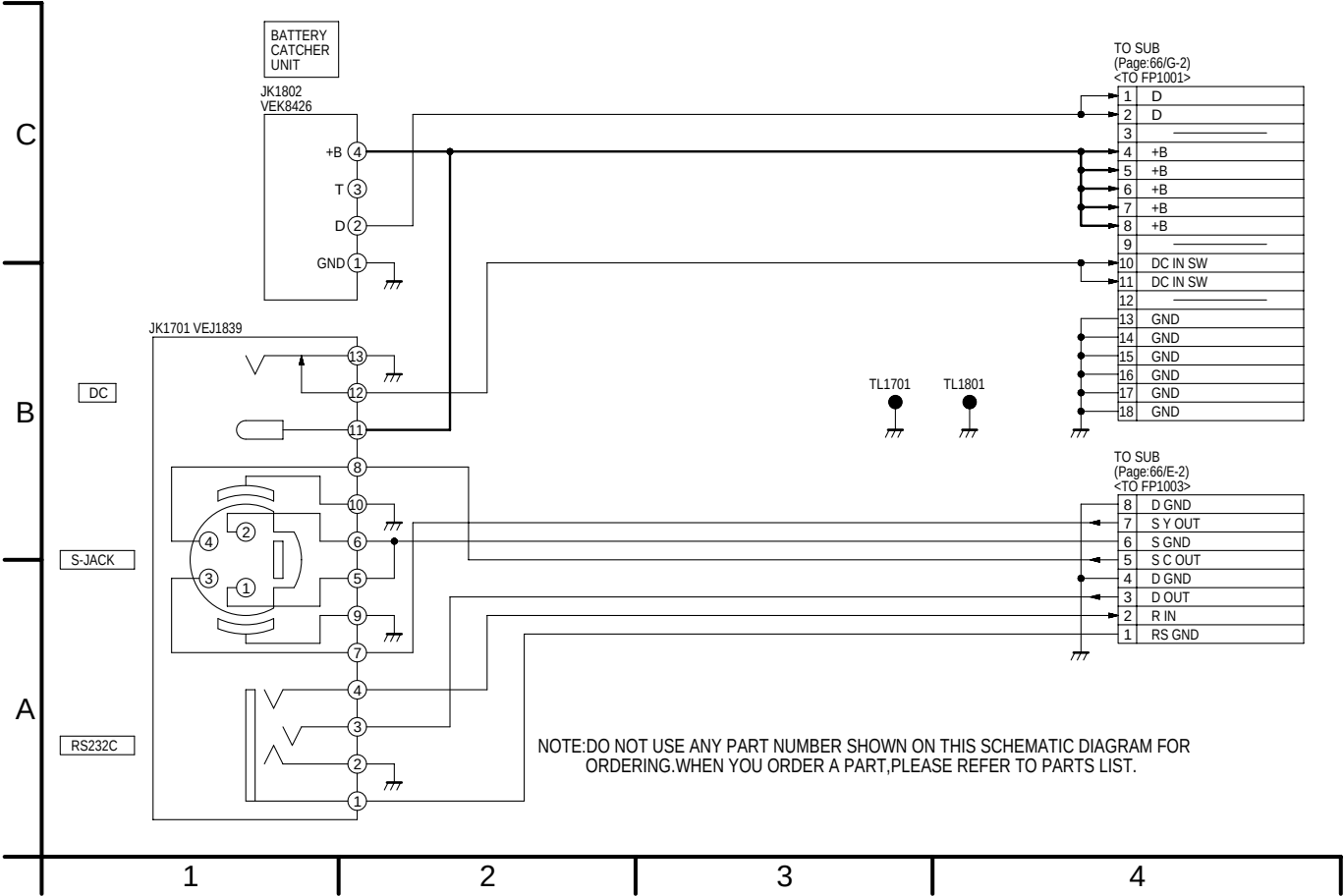
BATTERY CATCHER UNIT
JK1802 VEK8426
+B
T
D
GND
JK1701 VEJ1839
DC
S-JACK
RS232C
TL1701
TL1801
TO SUB (Page:66/G-2) <TO FP1001>
1 D
2 D
3
4 +B
5 +B
6 +B
7 +B
8 +B
9
10 DC IN SW
11 DC IN SW
12
13 GND
14 GND
15 GND
16 GND
17 GND
18 GND
TO SUB (Page:66/E-2) <TO FP1003>
8 D GND
7 S Y OUT
6 S GND
5 S C OUT
4 D GND
3 D OUT
2 R IN
1 RS GND
NOTE:DO NOT USE ANY PART NUMBER SHOWN ON THIS SCHEMATIC DIAGRAM FOR ORDERING.WHEN YOU ORDER A PART,PLEASE REFER TO PARTS LIST.
A
B
C
1
2
3
4

NOTE:MULTILAYER C.B.A.

THIS C.B.A. IS Multi-Layer C.B.A. THIS CIRCUIT BOARD SHOWS COMPONENT LAYOUT-PATTERN FOR COMPONENT SIDE AND FOIL SIDE. LAYOUT-PATTERNS ARE SINGLE PATTERN FOR EACH SIDE THAT MAKE EASY TO SIGHT THE COMPONENT LAYOUT.

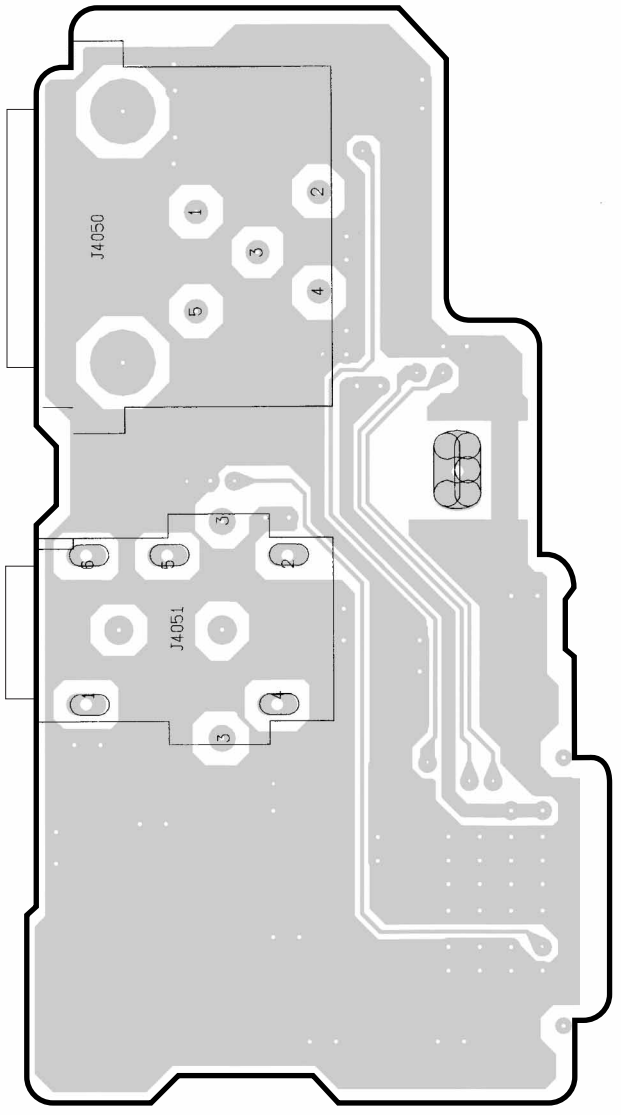

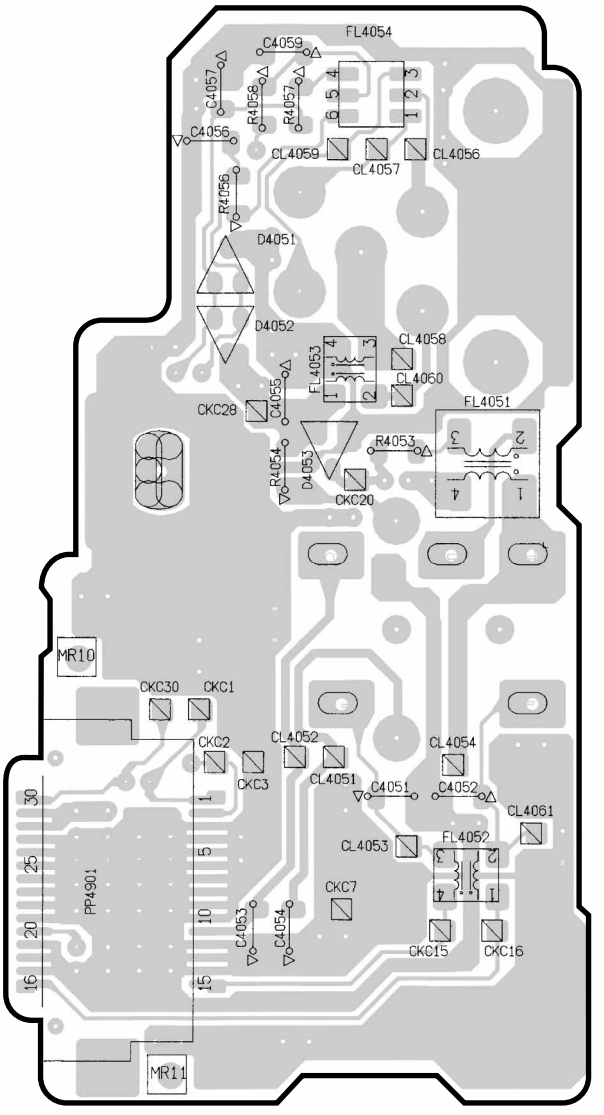

(COMPONENT SIDE) **(FOIL SIDE)**

C B A

1 2 3

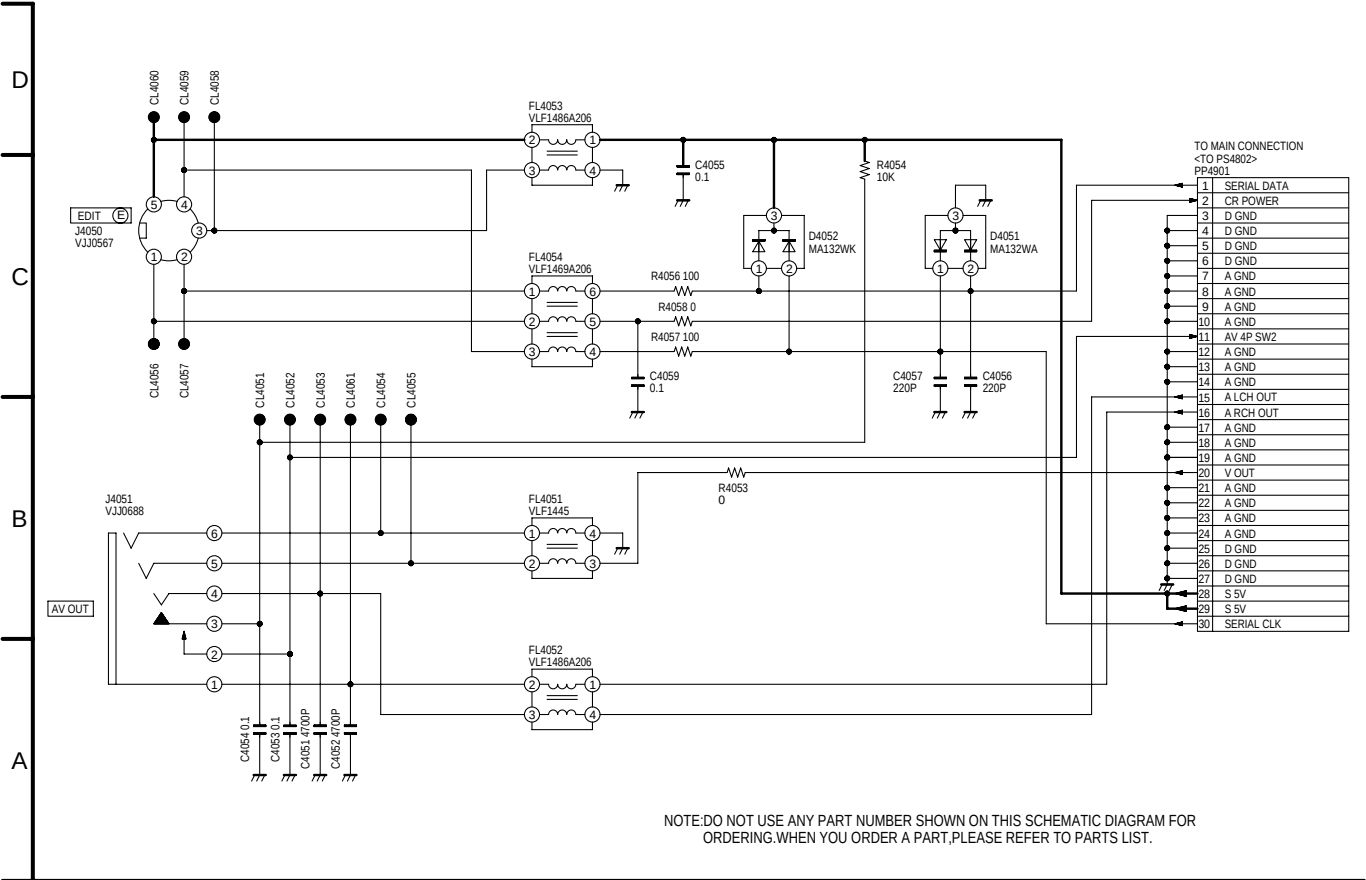

NOTE:DO NOT USE ANY PART NUMBER SHOWN ON THIS SCHEMATIC DIAGRAM FOR ORDERING.WHEN YOU ORDER A PART,PLEASE REFER TO PARTS LIST.

SUB C.B.A.

Integrated Circuit		QR1051	B-5	CL1001	B-1	L1033	A-2	C1025	B-3	C1106	C-6	C1151	C-6	R1031	A-6	R1109	C-6	R1303	C-3
IC1001	B-6	QR1081	B-5	CL1011	B-2	L1041	A-3	C1026	B-3	C1107	C-6	C1152	B-6	R1032	A-6	R1111	C-7	R1304	C-3
IC1002	B-2	QR1101	C-6	CL1021	B-2	L1042	B-3	C1027	B-3	C1108	C-6	C1153	B-6	R1033	A-6	R1112	B-7	R1305	C-3
Transistor		QR1301	C-3	CL1031	B-2	L1051	A-3	C1029	C-2	C1111	C-7	C1154	B-6	R1034	A-6	R1121	C-7	R1306	C-3
Q1011	A-7	QR1302	B-3	CL1041	B-3	L1052	A-4	C1031	A-6	C1112	C-7	C1155	C-6	R1040	B-6	R1122	B-6	R1307	C-3
Q1021	A-7	**Connector**		CL1051	B-4	L1081	B-3	C1032	A-2	C1113	B-7	C1156	C-3	R1041	B-6	R1131	B-7	R1308	C-3
Q1022	A-6	FP1001	A-7	CL1052	B-3	L1082	A-3	C1033	A-6	C1114	B-7	C1301	B-3	R1042	B-6	R1132	B-7	R1309	C-3
Q1031	A-6	FP1003	C-4	CL1081	C-3	L1301	C-3	C1036	B-2	C1117	B-2	**Resistor**		R1043	B-6	R1141	B-6	R1401	B-4
Q1041	A-6	FP1004	C-7	CL1082	C-3	**Transformer**		C1041	A-5	C1118	A-2	R1001	C-2	R1044	B-6	R1142	B-6	R1402	B-4
Q1042	A-5	FP1201	C-6	CL1083	C-4	T1051	A-3	C1042	A-3	C1119	C-1	R1003	B-2	R1045	B-6	R1151	B-6	R1403	B-4
Q1051	A-5	P1002	C-7	**Coil**		**Capacitor**		C1043	B-6	C1121	C-7	R1005	C-2	R1050	B-5	R1152	B-6	R1404	B-4
Q1052	B-3	PP1001	B-5	L1001	B-1	C1001	B-2	C1044	B-6	C1122	C-7	R1007	B-7	R1051	B-5	R1153	C-6	R1405	A-5
Q1053	B-6	**Diode**		L1011	A-1	C1002	B-1	C1045	B-3	C1123	B-6	R1008	B-2	R1052	B-5	R1154	C-6		
Q1054	B-6	D1051	A-5	L1012	B-2	C1003	B-2	C1046	B-3	C1124	B-7	R1009	B-7	R1053	A-5	R1155	B-3		
Q1055	B-3	D1052	A-4	L1014	B-2	C1004	A-2	C1052	A-5	C1125	C-2	R1010	C-7	R1054	A-6	R1156	B-6		
Q1056	B-3	D1082	A-3	L1015	C-1	C1005	B-1	C1053	A-5	C1127	C-2	R1011	C-7	R1057	B-6	R1157	B-6		
Q1083	C-5	D1101	C-6	L1016	C-1	C1011	A-7	C1055	A-3	C1128	B-2	R1012	C-7	R1058	B-6	R1186	B-6		
Q1084	C-6	D1151	B-3	L1017	A-2	C1012	A-1	C1056	A-4	C1129	B-2	R1013	C-7	R1059	B-6	R1187	B-6		
Q1101	C-6	D1152	B-3	L1021	A-2	C1013	C-7	C1057	A-4	C1131	B-7	R1014	C-7	R1087	C-6	R1250	B-3		
Q1301	C-3	D1301	C-3	L1022	B-3	C1014	B-7	C1085	B-4	C1132	B-7	R1015	C-7	R1088	C-6	R1251	B-3		
Q1302	C-3	**Filter**		L1023	B-3	C1016	B-2	C1086	A-3	C1133	B-7	R1020	B-6	R1089	B-6	R1252	B-3		
Q1303	C-3	FL1001	A-7	L1025	B-2	C1018	B-2	C1087	A-3	C1134	B-7	R1021	B-7	R1101	C-7	R1253	B-3		
Q1304	C-3	FL1401	C-4	L1026	B-2	C1019	C-2	C1101	C-7	C1141	B-6	R1022	B-6	R1102	C-6	R1254	B-3		
Transistor & Resistor		FL1402	B-4	L1027	C-2	C1021	A-7	C1102	C-6	C1142	B-6	R1023	A-6	R1103	C-6	R1255	C-3		
QR1001	B-2	**IP**		L1028	C-2	C1022	A-2	C1103	C-6	C1143	B-6	R1024	A-6	R1104	C-6	R1256	C-3		
QR1004	C-2	IP1001	A-7	L1029	B-2	C1023	A-7	C1104	C-6	C1144	B-6	R1025	A-6	R1107	C-6	R1301	C-3		
QR1050	B-3	**Test Point**		L1031	A-2	C1024	A-7	C1105	B-6	C1150	B-3	R1030	A-6	R1108	C-6	R1302	C-3		

ADDRESSINFORMATION

NOTE:MULTILAYER C.B.A.
THIS C.B.A. IS Multi-Layer C.B.A. THIS CIRCUIT BOARD SHOWS COMPONENT LAYOUT-PATTERN FOR COMPONENT SIDE AND FOIL SIDE. LAYOUT-PATTERNS ARE SINGLE PATTERN FOR EACH SIDE THAT MAKE EASY TO SIGHT THE COMPONENT LAYOUT.

IMPORTANT SAFETY NOTICE:
COMPONENTS IDENTIFIED WITH THE MARK △ HAVE THE SPECIAL CHARACTERISTICS FOR SAFETY.
WHEN REPLACING ANY OF THESE COMPONENTS, USE ONLY THE SAME TYPE.

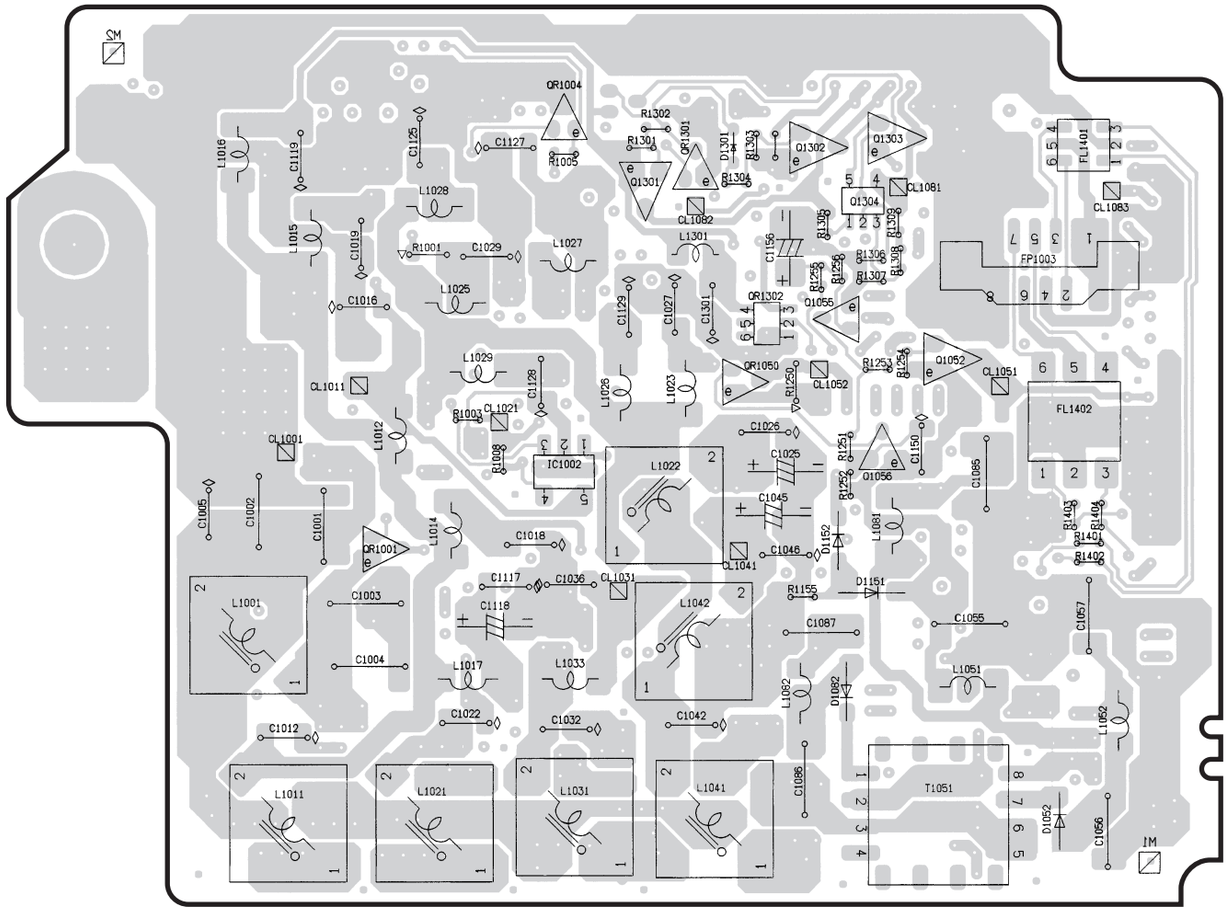

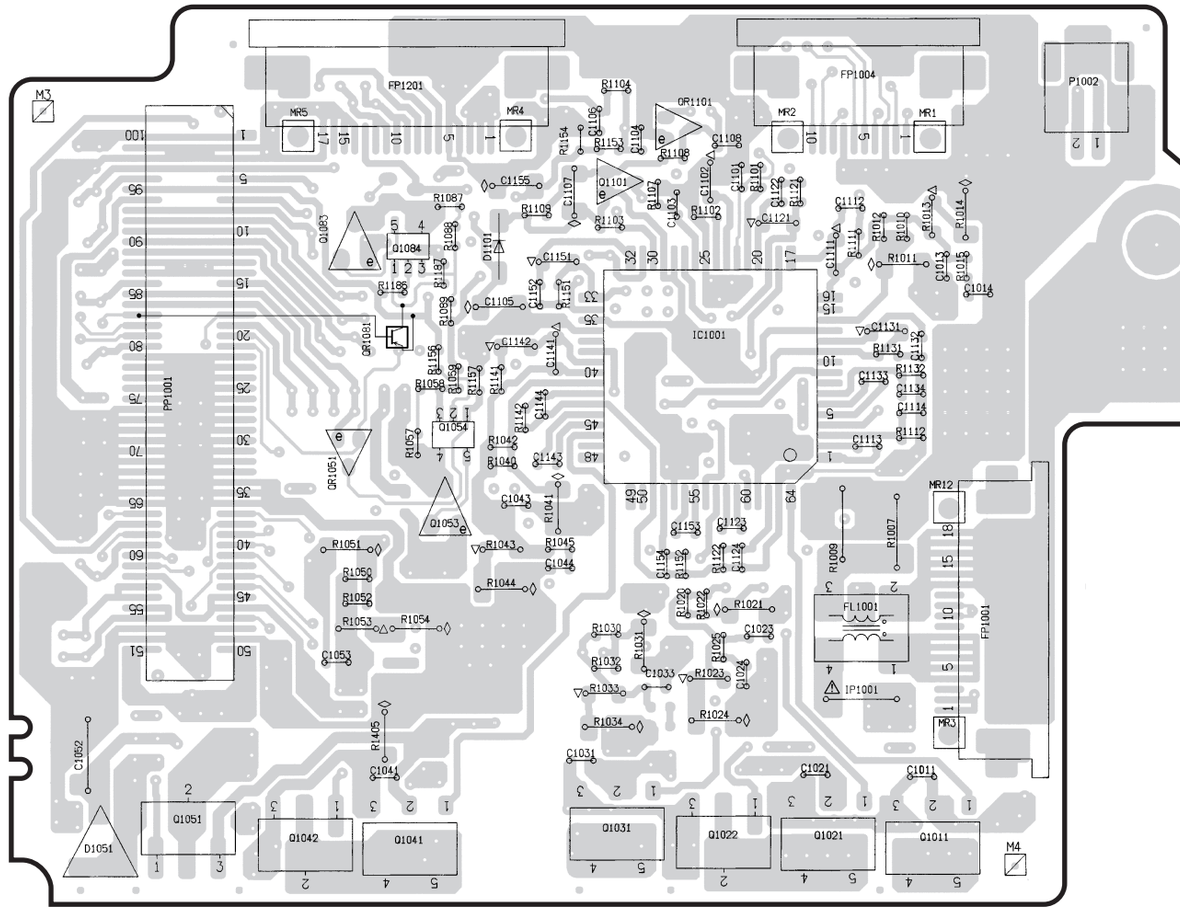

(COMPONENT SIDE) (FOIL SIDE)

TO REAR JACK
(Page:73/C-4)
FP1001

D	1	
D	2	
	3	
+B	4	
+B	5	
+B	6	
+B	7	
+B	8	
	9	
DC IN SW	10	A1
DC IN SW	11	
	12	
GND	13	
GND	14	
GND	15	
GND	16	
GND	17	
GND	18	

TO FRAME GND

TO SPEAKER UNIT
P1002

SP OUT1	1	A2
SP OUT2	2	A3

TO REAR JACK
(Page:73/B-4)
FP1003

RS GND	1	
R IN	2	A5
D OUT	3	A6
D GND	4	
S C OUT	5	A7
S GND	6	
S Y OUT	7	A9
D GND	8	

TO MENU OP.
(Page:71/E-1)
FP1004

MODE2	10	A10
MODE0	9	A11
MODE1	8	A12
D GND	7	
ENC(-)	6	A13
ENC SW	5	A14
ENC(+)	4	A15
D GND	3	
SCAN3	2	A16
MENU	1	A17

TO MONITOR
(Page:69/E-2)
FP1201

FP903-17	D GND	17
FP903-16	D GND	16
FP903-15	D GND	15
FP903-14	D GND	14
FP903-13	M -15V	13 B17
FP903-12	M 3V	12 A19
FP903-11	M 3V	11
FP903-10	M 5V	10 A20
FP903-9	M 5V	9
FP903-8	M 13.5V	8 A21
FP903-7	HALL VCC	7 A22
FP903-6	M BL 5V	6 B6
FP903-5	NOREG GND	5
FP903-4	NOREG GND	4
FP903-3	NOREG	3 A23
FP903-2	NOREG	2
FP903-1	NOREG	1

FL1001
VLF1378

IP1001
VSF0233F31

R1007 0
R1009 0

QR1001
UN9111J
(SWITCHING NOREG)

C1003 10
C1004 10
L1001 3.9u
C1001 10
C1002 10
C1005 3.3

CL1001

IC1001
BA9734AKV
(SWITCHING REGULATOR)

	IN 5	SCP 5	COMP	FB 6	IN 6	SCP 6	DTC 2	BIAS 6	C.H6	C.L6	OUT 6	BIAS 5	C.H5	C.L5		
1.5	1.5	6.9	0	1.5	6.3	7.1	7.6	7.1	6.7	6.6	7.1	5.4				
16	15	14	13	12	11	10	9	8	7	6	5	4	3	2	1	

	IN 3	SCP 3	SCP 2	FB 2	IN 2	GATE 1	FB 1	IN 1	SCP 1	BIAS 1	VCC	C.H1	C.L1	OUT 1	BIAS 2	C.H2
1.5	1.5	6.9		-	1.8	0.9	1.5	1.5	5.8	7.2	6.9	5.4	6.5	-	-	
33	34	35	36	37	38	39	40	41	42	43	44	45	46	47	48	

	FB 5	SCP 4	IN 4	FB 4	RT	CT	SCP	DUTY	GND	SOFT	VREF	VCC	STB 3	STB	DTC 3	FB 3
1.1	1.5	1.5	0.9	0.4	1.4	0	1.2		1.4	6.2	6.9	6.9	5.7	6.5	6.5	
17	18	19	20	21	22	23	24	25	26	27	28	29	30	31	32	

	OUT 5	VCC	BIAS 4	GND	GATE 4	C.H4	C.L4	OUT 4	OUT 3	C.L3	C.H3	GND	BIAS 3	VCC	OUT 2	C.L2
6.5	7.2	6.4	1.1		6.6	4.6	5.7	6.7	4.8	6.2		6.7	7.2	-	-	
64	63	62	61	60	59	58	57	56	55	54	53	52	51	50	49	

R1131 150
C1132 470P
C1131 0.047
C1112 470P
R1111 150
C1111 2200P
C1134 39P
R1132 8200
C1133 150P
C1114 39P
R1112 8200
C1113 150P
R1121 150
C1121 4700P
C1122 470P
R1101 22K
C1101 100P
C1102 0.33
R1102 4700
R1107 2.2M
C1103 0.047
C1104 0.1
R1103 4700
R1153 12K
C1155 2.2
R1154 47K
C1108 0.1
C1107 1
R1108 47K
R1109 10K
R1104 12K
C1151 8200P
C1152 8200P
R1151 150
C1106 0.1
C1141 0.1
C1142 470P
R1141 150
R1142 10K
C1144 39P
C1143 150P
R1122 6800
C1124 39P
C1123 150P
C1153 150P
C1154 82P
R1152 8200

D1101
MA8120-L

QR1101
UN9214J
(ERROR VOLTAGE DET.)

Q1101
2SB1462-R
(BUFFER)

Q1051
2SB798A
(SWITCHING)

IC1002
NJM2406F
(BATT.DET.)

R1003 2.2M

T1051
VTP0524

D1051
SB05-05CP

D1082
1SS355

L1081 220u
C1052 1
C1085 10

L1051 220u
C1053 2200P
R1051 27K
R1052 82
R1050 82
R1053 270
R1054 2700
C1055 10

Q1052
2SB1218A-R
(SWITCHING CAM 15V)

CL1051

C1150 1
R1254 47K
R1253 47K
R1251 68K
R1252 47K
Q1056
2SB1462-R
(SWITCHING)

D1151
MA8160-M

D1052
1SS355

QR1050
UN9213
(SWITCHING CAM -8V)

Q1055
2SD2216
(CCD ON H :ON)

R1155 10K
D1152
1SS355
R1256 47K
C1156 6.3V10

CL1052

R1255 47K

Q1053
2SD1819A
(SWITCHING CAM -8V)

L1052 10u
C1056 1
C1057 1
R1250 0
R1057 11K
R1058 560

Q1054
XP1401
(STABILIZER)

QR1051
UN9113J
(SWITCHING)

R1157 2700
R1156 3300
R1059 2700

C1105 1

CL1082

Q1083
2SD1819A
(SWITCHING M -15V)

L1082 10u
C1086 1
C1087 1
R1087 22K
R1088 3300
R1089 2700

Q1084
XP1401
(STABILIZER)

QR1081
UN9113J
(SWITCHING)

R1187 2700
R1186 3300

IMPORTANT SAFETY NOTICE:
COMPONENTS IDENTIFIED WITH THE MARK ⚠ HAVE THE SPECIAL CHARACTERISTICS
FOR SAFETY.WHEN REPLACING ANY OF THESE COMPONENTS,USE ONLY THE SAME TYPE.

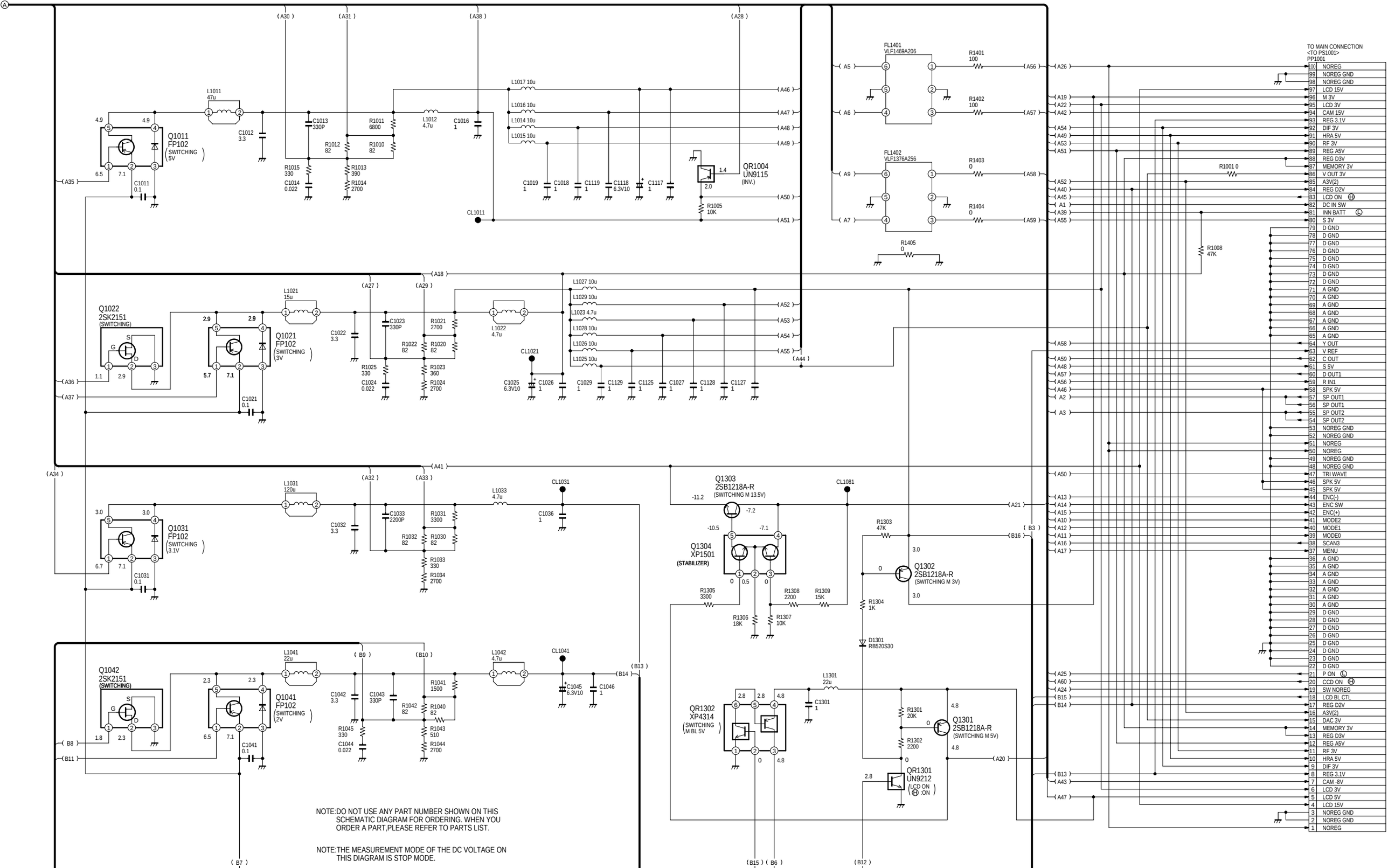

12 13 14 15 16 17 18 19 20 21

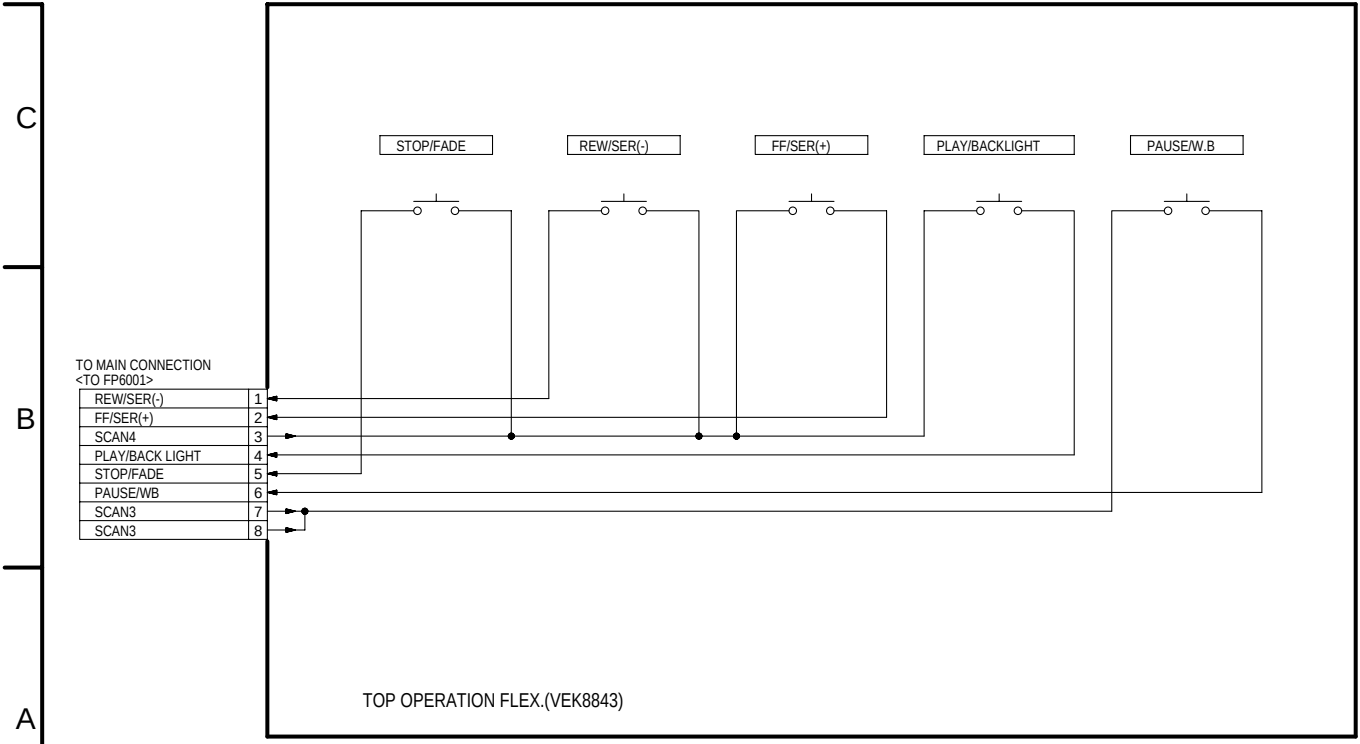

NOTE:DO NOT USE ANY PART NUMBER SHOWN ON THIS SCHEMATIC DIAGRAM FOR ORDERING.WHEN YOU ORDER A PART,PLEASE REFER TO PARTS LIST.

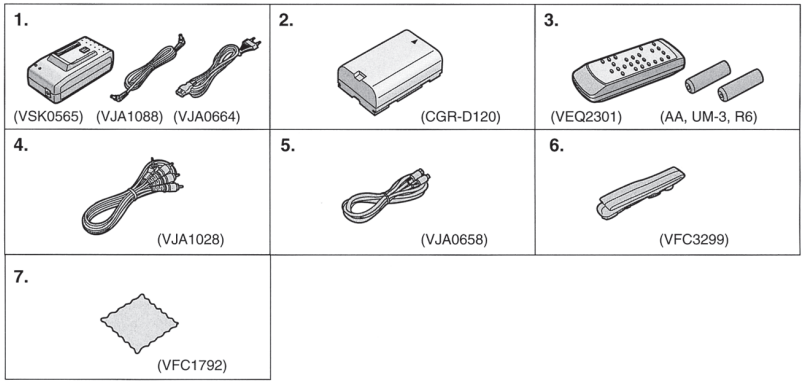

Standard Accessories

1. **AC Adaptor (➜ 16, 18)**
   To supply power to the Movie Camera.
   To charge the Battery.
   DC Input Lead and AC Mains Lead (➜ 16, 18)
   To connect the AC Adaptor to the Movie Camera and to an AC mains socket.
2. **Battery Pack (➜ 18)**
   To supply the Movie Camera with power.
3. **Remote Controller and Batteries for Remote Controller (➜ 104, 112, 114)**
4. **AV Cable (➜ 52, 116, 118, 120)**
5. **S-Video Cable (➜ 52, 116, 118, 120, 122, 124)**
6. **Shoulder Strap (➜ 28)**
7. **Cleaning Tissue**
   To clean the Lens and the LCD Monitor.

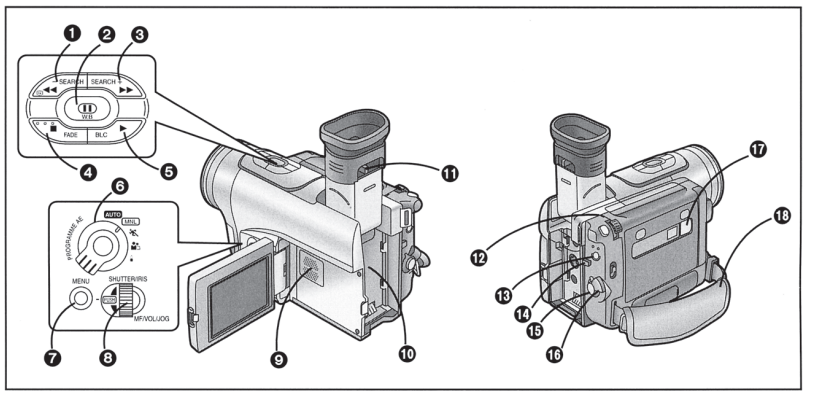

Controls and Components

1. **Reverse Search Button [−SEARCH] (➜ 56)**
   Rewind/Review Button [◀◀] (➜ 44, 46)
   Recording Check Button [⟲] (➜ 32)
2. **Pause Button [❚❚] (➜ 50)**
   White Balance Button [W.B] (➜ 82, 84)
3. **Forward Search Button [SEARCH+] (➜ 56)**
   Fast Forward/Cue Button [▶▶] (➜ 46)
4. **Fade Button [FADE] (➜ 66)**
   Stop Button [■] (➜ 44)
5. **Backlight Button [BLC] (➜ 32)**
   Play Button [▶] (➜ 44)
6. **Mode Selector Switch [PROGRAMME AE] (➜ 30, 68, 82, 84, 88, 90, 92)**
7. **Menu Button [MENU] (➜ 130)**
8. **Multi-Function Dial [PUSH/MF/VOL/JOG] (➜ 40, 42, 50, 58, 76, 88, 90, 130, 140, 144)**
9. **Speaker (➜ 44)**
10. **Battery Holder (➜ 18)**
11. **Eyepiece Corrector Knob (➜ 26)**
12. **Condensation Sensor Slot (➜ 150)**
    Through this slot, the Movie Camera detects condensation. Do not cover this slot with your fingers, etc. and take care that it does not get clogged with dirt.
13. **VCR (Playback) Mode/Camera (Recording) Mode Button (and Lamps) (➜ 30, 44)**
14. **Battery Eject Button [BATTERY EJECT] (➜ 18)**
15. **Recording Start/Stop Button (➜ 30)**
16. **Movie Camera Off/On Switch [OFF/ON] (➜ 26, 30, 54)**
17. **Cassette Compartment Lock Button [△LOCK] (➜ 22)**
18. **Grip Belt (➜ 28)**

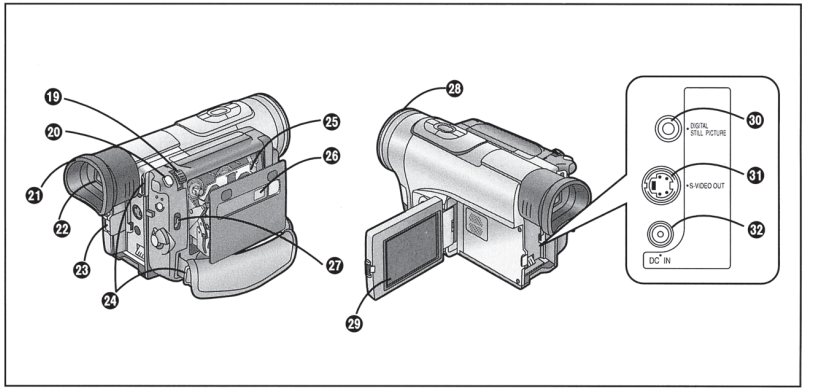

19. **Zoom Lever [W/T] (➜ 36)**
20. **Photoshot Button [PHOTOSHOT] (➜ 38)**
21. **Eyecup**
22. **Finder (➜ 26, 158)**

    Due to limitations in LCD production technology, there may be some tiny bright or dark spots on the Finder screen. However, this is not a malfunction and does not affect the recorded picture.

23. **LCD Monitor Open Button [PUSH OPEN] (➜ 26)**
24. **Shoulder Strap Holders (➜ 28)**
25. **Cassette Compartment (➜ 22)**
26. **Cassette Compartment Window (➜ 22)**
27. **Cassette Eject Lever [⏏ EJECT] (➜ 22)**
28. **Lens Hood (➜ 158)**
29. **LCD Monitor (➜ 26, 158)**

    Due to limitations in LCD production technology, there may be some tiny bright or dark spots on the LCD Monitor screen. However, this is not a malfunction and does not affect the recorded picture.

30. **Digital Still Picture Terminal [DIGITAL STILL PICTURE] (➜ 128)**
31. **S-Video Output Socket [S-VIDEO OUT] (➜ 52, 116, 118, 120, 122, 124)**
32. **DC Input Socket [DC IN] (➜ 16)**

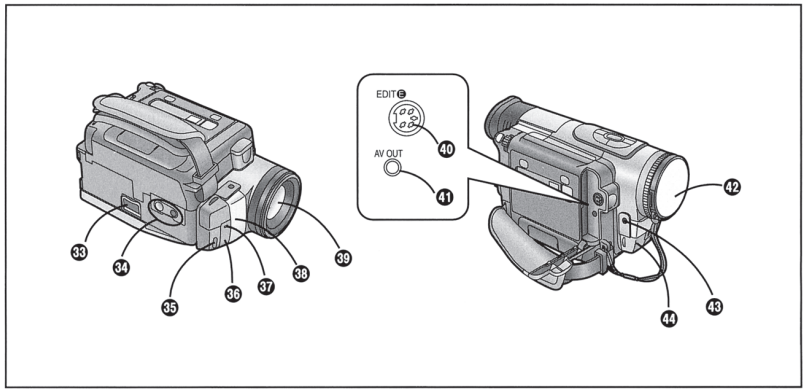

33 Support Leg (➜ 44)

34 Tripod Receptacle
To mount the Movie Camera on an optional tripod.

35 Focus Button [FOCUS] (➜ 88)

36 White Balance Sensor (➜ 166)
Remote Control Sensor (➜ 114)

37 Recording Lamp (➜ 30)

38 Microphone (built-in, stereo)

39 Lens

40 Edit Socket [EDIT] (➜ 118, 120, 124)

41 Audio-Video Output Socket [AV OUT]
(➜ 52, 116, 118, 120, 158)
When a cable is connected to this socket, the Movie Camera's built-in speaker is turned off.

42 Lens Cap (➜ 28, 54, 84)

43 Microphone Socket [MIC]
To connect an external microphone or audio equipment. (Connecting to this socket deactivates the built-in microphone.)

44 DV Terminal (i.LINK) [i]
To output digital signals.
Connect it to digital video equipment.
"i.LINK" is the name of the connector in accordance with the International Standard IEEE1394-1995.
"i" is the logo marked on products conforming with the "i.LINK" specifications.
Inputting digital signals into this Movie Camera is not possible.

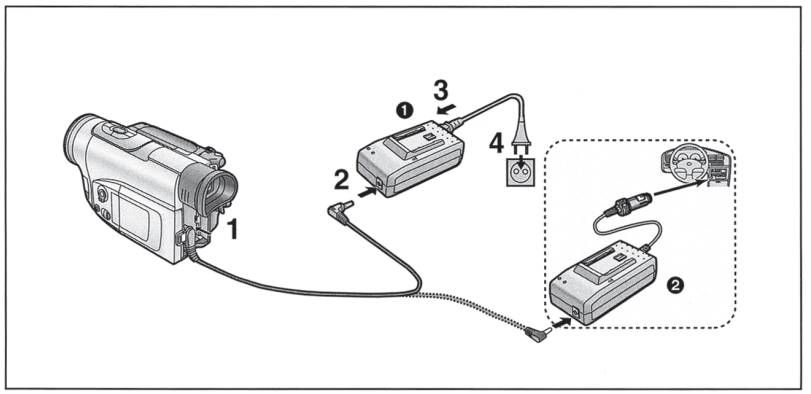

The 3 Types of Power Supplies

1) AC Adaptor ❶ (supplied) to supply power from an AC mains socket
2) Car Battery Charger ❷ (optional) to supply power from the cigarette lighter socket in a vehicle
3) Battery (supplied) **(➜ 18)**

■ Supplying Power from an AC Mains Socket

1 Connect the plug of the DC Input Lead to the [DC IN] Socket on the Movie Camera.

2 Connect the other plug of the DC Input Lead to the [DC OUT] Socket on the AC Adaptor.

3 Connect the AC Mains Lead to the AC Adaptor.

4 Connect the other end of the AC Mains Lead to an AC mains socket.
- Before disconnecting the AC Mains Lead, set the [OFF/ON] Switch to [OFF].
- **If you use the Movie Camera for a long time, it becomes warm. However, this is normal.**

■ Using the Car Battery Charger as Power Source for the Movie Camera

The use of the Car Battery Charger (VW-KBD2E; optional) makes it possible to supply power to the Movie Camera in a car for recording and playback.
It also allows charging the Movie Camera's Battery.
- **After use, be sure to disconnect the Car Battery Charger from the cigarette lighter socket.**
- If the Car Battery Charger is already connected to the cigarette lighter socket when you start the engine, the fuse in the Car Battery Charger's plug may blow out.
- Also read the operating instructions of the Car Battery Charger.

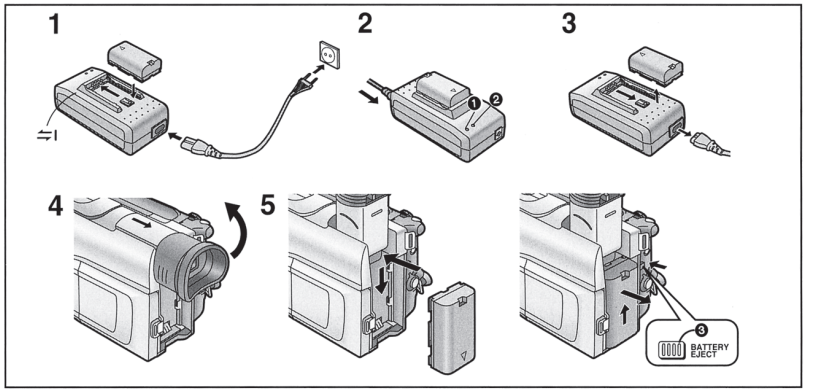

■ Supplying Power with the Battery

Before use, fully charge the Battery.

1 Place the Battery on the AC Adaptor as shown above and slide it horizontally until it stops.
- If the DC Input Lead is connected to the AC Adaptor, disconnect it as charging is not possible otherwise.

2 Securely connect the AC Mains Lead to the AC Adaptor and an AC mains socket.
- The [POWER] Lamp ❶ lights and then the [CHARGE] Lamp ❷ flashes for a few seconds before it remains lit and charging starts.
- If the [CHARGE] Lamp does not flash even though the Battery is attached, remove the Battery and then re-attach it.
- When the [CHARGE] Lamp goes out, charging is finished.

3 Remove the Battery by sliding it in the opposite direction of Step 1 above.
- Also disconnect the AC Mains Lead.

4 Slide the Finder backward to its fully extended position and then tilt it upward.

5 Insert the Battery into the Battery Holder on the Movie Camera and slide it downward until it locks with a click.

Removing the Battery from the Movie Camera
While pressing the [BATTERY EJECT] Button ❸, slide the Battery upward to remove it.
- Be careful not to drop the Battery by accident.
- Before removing the Battery, set the [OFF/ON] Switch to [OFF].

■ Charge Lamp [CHARGE]

Flashing:	During checking of the Battery condition
Lit:	During charging
Off:	The Battery is fully charged.

- If you charge the Battery when it is not yet discharged, the [CHARGE] Lamp may flash briefly and then go out. This indicates that the Battery is fully charged. Therefore, this is not an indication of a malfunction.

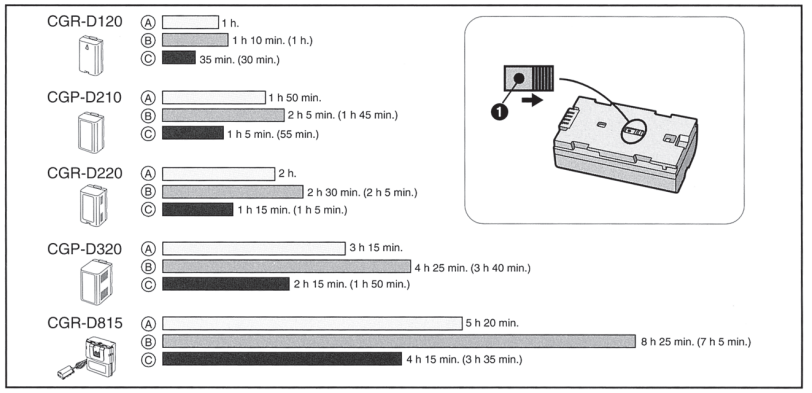

Charging Time and Maximum Time for Continuous Recording

Ⓐ **Charging Time**
Ⓑ **Maximum Continuous Recording Time**
Ⓒ **Intermittent Recording Time**
(The Intermittent Recording Time indicates the total recording time possible when you start and stop recording repeatedly.)

- **"1 h 10 min." stands for "1 hour and 10 minutes".**
- The Battery Model CGR-D120 is supplied.
- The times shown in the above chart are approximations. The figures in parentheses show the recording time when using the LCD Monitor.

The times listed above for your information indicate the duration of recording performed at an ambient temperature of 20°C and 60% relative humidity. The charging time may be longer when you charge the Battery at higher or lower temperature.

- During use and charging, the Battery becomes warm. The Movie Camera, too, becomes warm during use.
- When you repeatedly stop and restart recording, the recording time per Battery is shorter than listed above.
- If you do not use the Battery for a long time, please read "Precautions for Storage" **(➔ 156)**.
- **The Battery models CGP-D110 and CGP-D105 cannot be charged with this AC Adaptor.**

When the [CHARGE] Lamp Flashes Continuously

If the temperature of the Battery is extremely low or extremely high, the [CHARGE] Lamp on the AC Adaptor flashes continuously. It also flashes continuously when some malfunction has occurred in the Battery or the AC Adaptor. For details, read "Notes about the AC Adaptor" **(➔ 148)**.

Using the Charge Confirmation Marker

You can use this marker to easily distinguish between charged and discharged Batteries.
For example, slide the knob so that the red dot (●) ❶ is visible after the charging is completed.

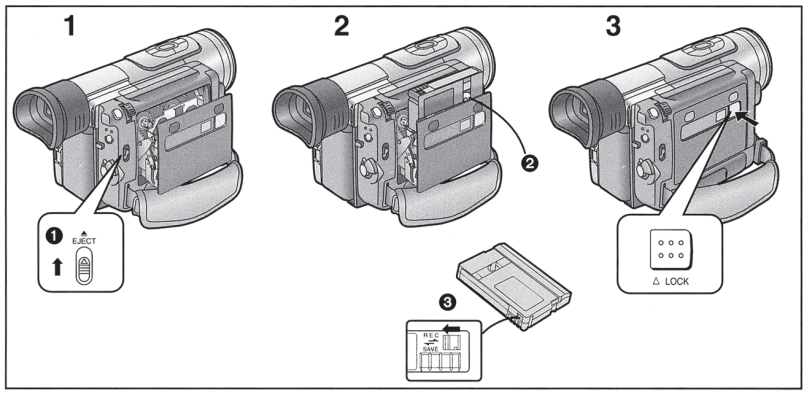

Inserting the Cassette

1 Slide the [▲ EJECT] Lever ❶ upward to open the Cassette Compartment.

2 Insert the cassette with its window in position ❷.

3 Close the Cassette Compartment and press the [△LOCK] Button to lock the Cassette Compartment.

- If the AC Adaptor or Battery is used to supply power, it is possible to insert or eject the cassette without turning on the Movie Camera.
- When opening or closing the Cassette Compartment, push down the Grip Belt so that it does not obstruct the opening and closing of the Cassette Compartment. Otherwise the Grip Belt may prevent the Cassette Compartment from opening completely, or it may get caught under the Cassette Compartment Cover and prevent it from closing properly.

- When inserting the cassette, make sure it faces in the right direction and then push it in until it stops.
- When you insert a cassette onto which you have recorded before, use the Camera Search Function **(➔ 56)** to search for the position from which you want to continue recording.
- When you insert a new cassette, rewind the tape to the beginning before starting to record.

Preventing Accidental Erasure of Recordings
Opening the cassette's erasure prevention slider ❸ (sliding it in the direction of the [SAVE] arrow) prevents recording. To record again, close the erasure prevention slider (slide it in the direction of the [REC] arrow).

■ LP Mode

The desired recording speed can be selected with [REC SPEED] on the [OTHER FUNCTIONS] Sub-Menu. (➔ 130)

If you select the LP Mode, the possible recording time is 1.5 times as long as in the SP Mode.
Recording in the LP mode does not deteriorate the picture quality. However, the playback picture may contain mosaic-like patterns and certain functions may be restricted.

- In the following cases, mosaic-like patterns may appear in the playback picture, or the picture may not be played back correctly:
  - When a cassette recorded in the LP Mode on this Movie Camera is played back on other digital video equipment.
  - When a cassette recorded in the LP Mode on other digital video equipment is played back on this Movie Camera.
  - When a cassette recorded in the LP Mode on this Movie Camera is played back on digital video equipment not featuring the LP Mode.
  - In the Slow Motion or Still Advance Playback Mode. **(➔ 48, 50)**
  - When using the Camera Search Function. **(➔ 56)**
- As the recording track width in the LP Mode is smaller than the head width, recording new sound onto an already recorded cassette (audio dubbing) **(➔ 100)** is not possible.

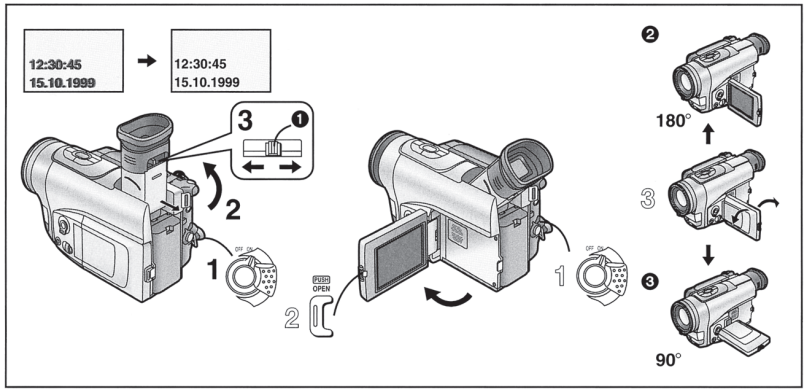

Using the Finder

Before using the Finder, adjust it to your eyesight so that the indications in the Finder are clear and easy to read.

1 **Set the [OFF/ON] Switch to [ON].**

2 **Slide the Finder backward completely and then tilt it upward.**
The angle of the Finder can be adjusted upward. However, be sure to slide the Finder backward until it stops, before turning it upward.

3 **Adjust by sliding the Eyepiece Corrector Knob ❶.**

Note:
Do not leave the Finder exposed to direct sunlight, as its magnifying glass could bundle the light beams and seriously heat-damage the Finder.

Using the LCD Monitor

It is also possible to record while viewing the picture on the opened LCD Monitor.

1 **Set the [OFF/ON] Switch to [ON].**

2 **Push the [PUSH OPEN] Button and simultaneously turn out the LCD Monitor approximately 90° in the direction of the arrow.**
The Finder turns off.

Adjusting the Angle

3 **Adjust the angle of the LCD Monitor according to the desired recording angle.**
- The LCD Monitor rotates upward by a maximum of 180° ❷ and downward by a maximum of 90° ❸ from its normal vertical position. Trying to forcefully rotate it beyond this range could seriously damage the Movie Camera.

Closing the LCD Monitor

Push the LCD Monitor close until the [PUSH OPEN] Button locks with a click.

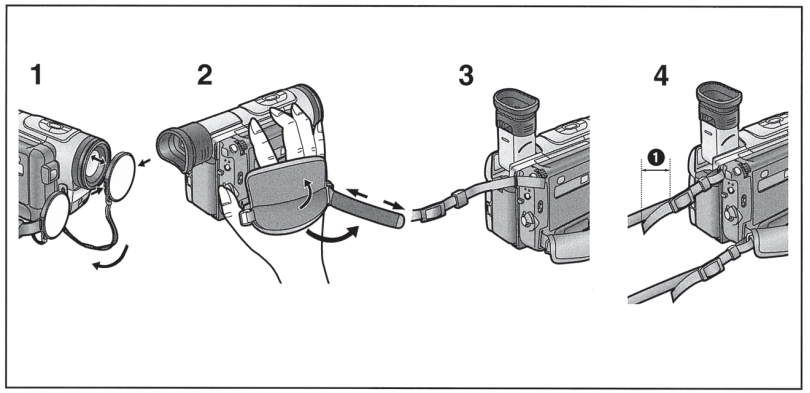

Handling the Lens Cap

Before you start recording, remove the Lens Cap.

1 **You can hook the removed Lens Cap onto the Grip Belt.**
When not actually recording, always attach the Lens Cap to the Lens to protect it.

Note:
Do not leave the Lens exposed to direct sunlight, as it could bundle the light beams and seriously heat-damage the CCD-Sensor.

Adjusting the Grip Belt

You can adjust the Grip Belt to the size of your hand.

2 **Open the Grip Belt Cover and adjust the length of the Grip Belt.**

Attaching the Shoulder Strap

Before you go recording outside, we recommend that you attach the Shoulder Strap to prevent the Movie Camera from dropping accidentally.

3 **Pull the end of the Shoulder Strap through the Shoulder Strap Holder on the Movie Camera.**

4 **Fold the end of the Shoulder Strap back, pull it first through the loop and then the Shoulder Strap Length Adjuster.**
Pull it out more than 2 cm ❶ from the Shoulder Strap Length Adjuster so that it cannot slip off.

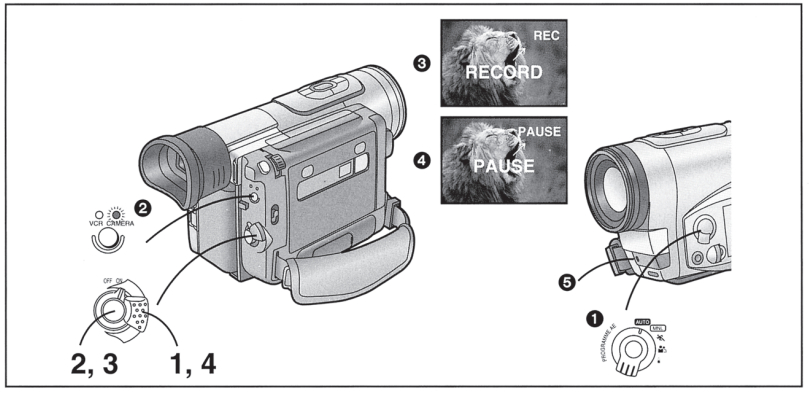

Recording

When the Mode Selector is set to [AUTO] ❶, you can simply turn on the Movie Camera and press the Start/Stop Button to start recording, and the focus and white balance are adjusted automatically.

- Depending on the light source and recording situation, correct automatic focusing and white balance adjustment may not be possible. In such cases, adjust them manually.
  Focus: **(➔ 88)**; White Balance: **(➔ 82, 84, 86)**

1 **Set the [OFF/ON] Switch to [ON].**
The [CAMERA] Lamp lights. ❷

2 **Press the Start/Stop Button.**
- Recording starts.
- The [RECORD] Indication appears briefly and then changes to [REC]. ❸

3 **To pause recording:**
Press the Start/Stop Button again.
The [PAUSE] Indication appears. ❹

4 **To finish recording:**
Set the [OFF/ON] Switch to [OFF].

- Be sure to remove the Lens Cap before setting the [OFF/ON] Switch to [ON]. If the Lens Cap is attached to the Lens when you set the [OFF/ON] Switch to [ON], the automatic white balance adjustment **(➔ 84)** may not be precise.
- **If you leave the Movie Camera in the Recording Pause Mode for more than 6 minutes, it automatically switches off to protect the tape and to conserve battery power. To resume recording from this condition, set the [OFF/ON] Switch to [OFF] and then to [ON] again.**

Recording Lamp (Tally Lamp)

The Recording Lamp lights ❺ during recording to let the people in front of the Movie Camera know that recording is being performed.
If you set [REC LAMP] on the [OTHER FUNCTIONS] Sub-Menu to [OFF], the Recording Lamp does not light.

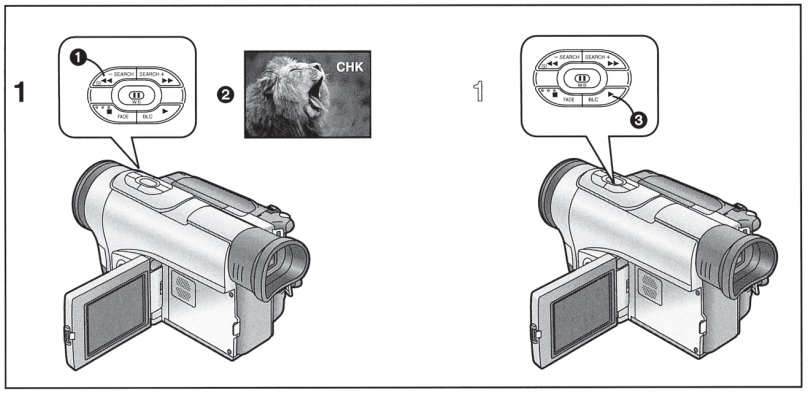

Checking If the Picture Is Recorded
(Recording Check)

To play back the final few seconds of the last recorded scene in the Recording Pause Mode.

1 Press the Recording Check Button [⟲] ❶ briefly in the Recording Pause Mode.

The [CHK] Indication ❷ appears.
After checking, the Movie Camera returns to the Recording Pause Mode.

- For Recording Check, the Movie Camera must be in the same mode (SP or LP) as used for recording, otherwise the playback picture is distorted.

Recording Backlit Scenes
(Backlight Compensation)

To prevent the backlit subject from being recorded very dark.
(Backlight means that the light falls on the subject from behind, i.e. the subject is between the light source and the Movie Camera.)

1 Keep the Backlight Button [BLC] ❸ pressed.

The backlight is being compensated as long as you keep the Button pressed, and the subject is recorded more brightly. (The picture brightens up as a whole.)

Returning to Normal Recording
Release the Backlight Button [BLC].

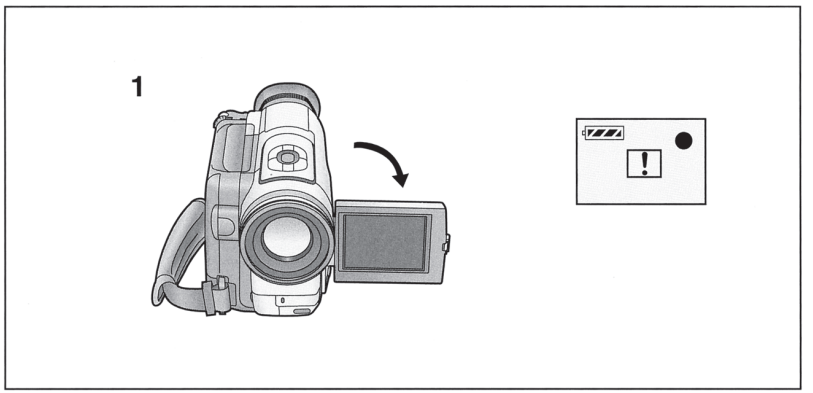

Recording Yourself
(Recording with the LCD Monitor Facing Forward)

This makes it possible to record yourself while viewing the picture on the LCD Monitor or to show the persons in front of the Movie Camera the picture being recorded.

1 Open the LCD Monitor and turn it so that it faces forward (lens side).
- Opening the LCD Monitor automatically turns off the Finder. However, when you turn the LCD Monitor forward, the picture also appears in the Finder.
- This lets you aim the Movie Camera and view the picture in the Finder, while the persons in front of the Movie Camera can check the picture on the LCD Monitor during recording.

Mirror Mode for the Picture on the LCD Monitor
You are used to looking at yourself in the mirror. Therefore, when recording yourself with the LCD Monitor facing forward, the picture (as it is being recorded) might look unusual and distracting. If you prefer to see yourself on the LCD Monitor in the same way as you see yourself in a mirror, i.e. with the sides reversed, set [SELFSHOOT] on the [DISPLAY SETUP] Sub-Menu to [MIRROR]. However, the picture will still be recorded in the normal, non-reversed way.
This mirror mode for the picture on the LCD Monitor works only during recording and in the Recording Pause Mode with the LCD Monitor facing forward. Also, it is completely different from the Mirror Mode of the Digital Effects 1 **(➜ 72)**.

- In the Mirror Mode, only the following indications are displayed.
  ●: Recording
  ●❚❚: Recording Pause
  ▭: Remaining Battery Power

When the General Warning/Alarm Indication [⚠] appears, turn the LCD Monitor backward so that you can confirm the actual Warning/Alarm Indication **(➜ 182)**.

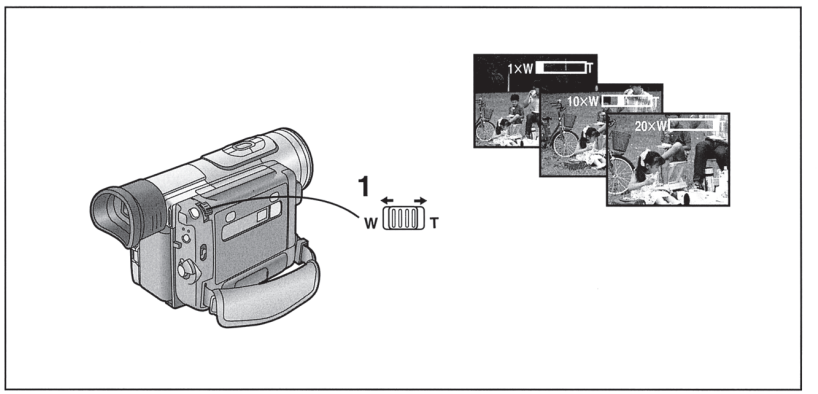

Enlarging Your Subject or Widening the Recording Angle
(Zooming In/Out)

Recording close-ups of your subjects and recording wide-angle shots add special effects to your videos.

1 To record a wider view (Zooming-out): Push the [W/T] Zoom Lever toward [W].
To enlarge your subject (Zooming-in): Push the [W/T] Zoom Lever toward [T].
- The Zoom Magnification Indication appears for a few seconds.
- The farther you push the [W/T] Zoom Lever toward [W] or [T], the faster the zooming speed becomes.
- During recording, the zooming speed is lower than during recording pause.
- When you have zoomed to the tele setting, precise focusing is only possible on subjects no closer than 2.2 metres.

Enlarging Your Subjects Even More (Digital Zooming)
This function is convenient when you want to enlarge a very distant subject even more than is possible with the normal (optical) zoom which offers a magnification range of 1×–20×. For the Digital Zoom Function, you can choose between up to 40× and up to 400× magnification.

- **40×**: Digital zooming up to 40×.
- **400×**:Digital zooming up to 400×.
- The higher the Digital Zoom Magnification is, the lower is the picture quality.
- When you have zoomed to 20× or higher (digital zoom range), manually adjusting the white balance or selecting any of the preset white balance modes is not possible.

Recording Extra Close-up Shots of Small Subjects (Macro Close-up Function)
When the zoom magnification is 1×, the Movie Camera can focus on subjects down to a distance of approximately 5 mm between lens and subject. This allows recording very small subjects such as insects.

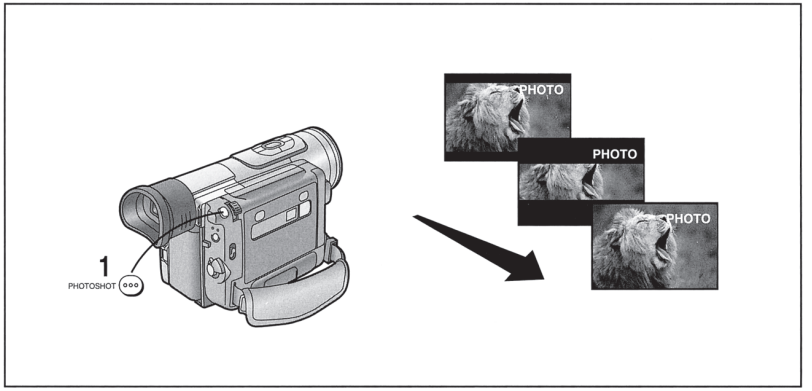

Using the Movie Camera as a Digital Still Camera (Photoshot)

With this function, you can record still pictures with sound for approximately 7 seconds each.
This function is convenient for example for pictures that you want to print on a Video Printer.

1 Press the [PHOTOSHOT] Button.
The Movie Camera records a still picture for approximately 7 seconds and then switches over to the Recording Pause Mode.

- If you set [SHTR EFFECT] on the [CAMERA SETUP] Sub-Menu to [ON], the screen blinks briefly and a simulated shutter click sound can be heard when you press the [PHOTOSHOT] Button. This audiovisual effect is also recorded.
- With the still pictures that you have recorded in the Photoshot Mode, you can do the following:
  - Index Search **(➜ 60)**
  (However, searching for the picture(s) recorded at the beginning of the tape may not be possible.)
  - Automatic printing **(➜ 124)**

- The visual shutter effect and click sound may occur with slight delay after recording of the still picture has started.
- The picture quality deteriorates slightly.

Continuous Photoshot
If you set [SHTR EFFECT] on the [CAMERA SETUP] Sub-Menu to [ON] and keep the [PHOTOSHOT] Button pressed in the Recording Pause Mode, the Movie Camera automatically records still pictures successively at intervals of approximately 0.7 seconds until you release the button.

- One more still picture may be recorded after you release the [PHOTOSHOT] Button.
- As the still pictures recorded in the Continuous Photoshot Mode are not marked with photoshot index signals, they cannot be located by using the Photoshot Index Search Function and printed with the Auto Print Function.

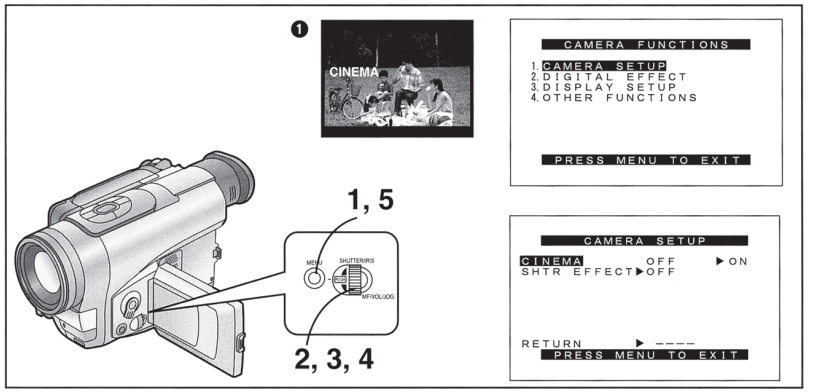

Recording in the Cinema Mode (Cinema Mode)

This mode lets you record in the cinema-like wide-screen format.

1 Press the [MENU] Button.
The [CAMERA FUNCTIONS] Main-Menu appears.

2 Turn the [PUSH] Dial to select [CAMERA SETUP] and then press the [PUSH] Dial.
The [CAMERA SETUP] Sub-Menu appears.

3 Turn the [PUSH] Dial to select [CINEMA].

4 Press the [PUSH] Dial to select [ON].
Black bars appear at the top and bottom of the screen ❶.

5 Press the [MENU] Button to exit the menu.

Cancelling the Cinema Mode
Set [CINEMA] on the [CAMERA SETUP] Sub-Menu to [OFF].

- Using the Cinema Mode does not widen the recording angle.
- If you play back the picture recorded in the Cinema Mode on a wide-screen (16:9) format TV, the size of the playback picture is automatically adjusted to match the format of the TV screen. For details, read the TV's operating instructions.

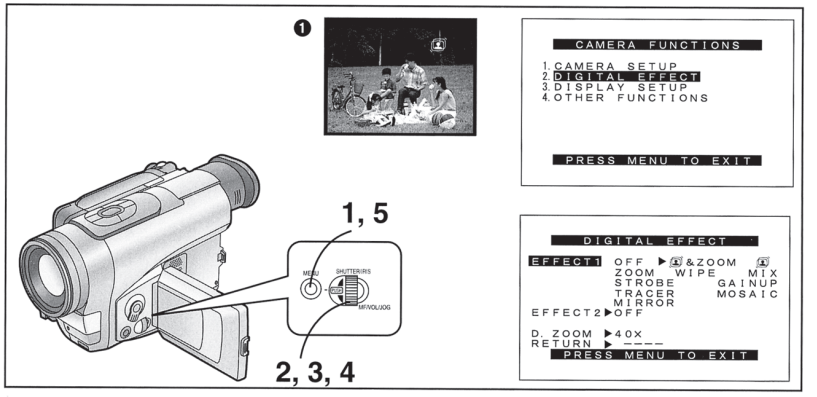

Recording with Minimised Camera Shake (Super Image Stabilizer)

In recording situations where shaking of the Movie Camera is likely to happen, for example when you have zoomed in on a distant subject or when you record while walking, you can use this function to stabilize the image.

- In case of very strong camera shake, it may not be possible to stabilize the picture.

1 Press the [MENU] Button.
The [CAMERA FUNCTIONS] Main-Menu appears.

2 Turn the [PUSH] Dial to select [DIGITAL EFFECT] and then press the [PUSH] Dial.
The [DIGITAL EFFECT] Sub-Menu appears.

3 Turn the [PUSH] Dial to select [EFFECT1].

4 Press the [PUSH] Dial to select [& ZOOM] or [ ].

5 Press the [MENU] Button to exit the Menu.
The [ ] Indication ❶ appears.

- In a dimly lit place, the Super Image Stabilizer Function may not work. In this case, the [ ] Indication flashes.
- Under fluorescent lamps, the picture brightness may fluctuate and the colours may be unnatural.
- After-image distortion may occur.
- When you use a tripod, we recommend that you turn the Super Image Stabilizer Function off.

Cancelling the Super Image Stabilizer Function
Set [EFFECT1] on the [DIGITAL EFFECT] Sub-Menu to [OFF].

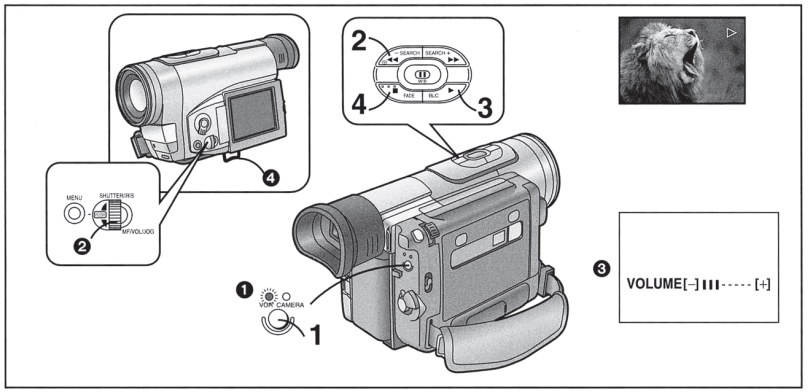

Viewing the Just Recorded Scenes on the Movie Camera (Playback)

You can play back recorded scenes right after recording.

1 Press the [VCR/CAMERA] Button so that the [VCR] Lamp ❶ lights.

2 Press the Rewind Button [◀◀] to rewind the tape.
- Rewind the tape to the point where the recording started.
- If the tape reaches the beginning, rewinding automatically stops.

3 Press the Play Button [▶] to start playback.

4 To stop playback:
Press the Stop Button [■].

■ Adjusting the Sound Volume

Keep the [VOL] Dial ❷ pressed until the [VOLUME] Indication ❸ appears. Then, turn the [VOL] Dial to adjust the volume. After adjusting, press the [VOL] Dial to make the [VOLUME] Indication disappear.
To adjust the volume with the Remote Controller, press the [T] or [W] Button to make the [VOLUME] Indication appear. You can then increase the volume by pressing the [T] Button or decrease it by pressing the [W] Button. A few seconds after finishing the adjustment, the [VOLUME] Indication disappears.

- Only the volume of the sound from the Movie Camera's built-in speaker can be adjusted.
- When using the Playback Zoom Function, it is not possible to adjust the sound volume.
- If a cassette recorded with copyright protection signal is played back, the screen becomes black.

Using the Support Leg for Easy-to-View Playback

Extending the Support Leg ❹ from the underside of the Movie Camera makes it easier to view the playback picture on the LCD Monitor.

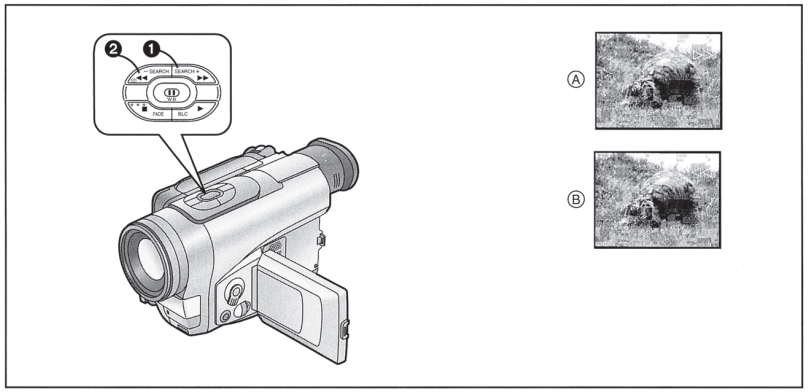

Searching for a Scene That You Want to Play Back

Cue Playback Ⓐ

Keep the Cue Button [▶▶] ❶ pressed during playback.

Review Playback Ⓑ

Keep the Review Button [◀◀] ❷ pressed during playback.

Search Lock Function

For longer Cue or Review Playback, press the Cue Button [▶▶] or the Review Button [◀◀] only briefly. As this locks the search function, you do not need to keep the button pressed for a long time.

- To resume normal playback, press the Play Button [▶].
- In Cue and Review Playback, pictures with fast-moving subjects may contain mosaic-like patterns.

Hyper Check Function

- If you press the Fast-forward Button [▶▶] during fast-forwarding of the tape or the Rewind Button [◀◀] during rewinding of the tape, Cue Playback or Review Playback continues for as long as you keep the Button pressed.
- At the beginning and end of Cue Playback or Review Playback, some momentary picture distortion may occur.

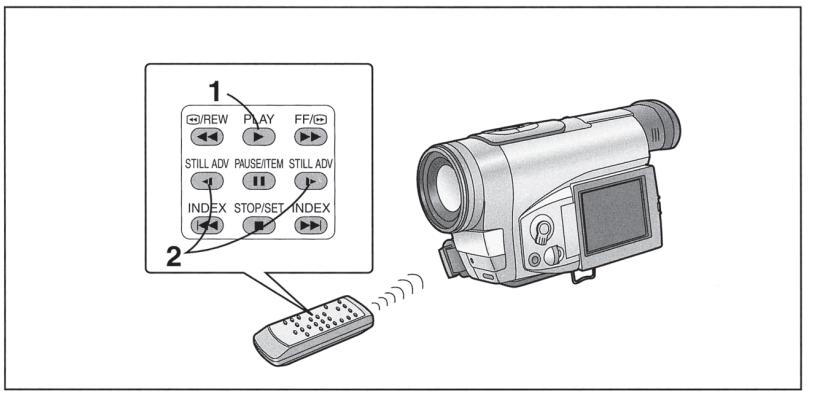

Playing Back in Slow Motion
(Slow Motion Playback)

1 Press the Play Button [▶].

2 Press the Slow Motion/Still Advance Button [◂I] or [I▸] on the Remote Controller.
Pressing the [◂I] Button starts slow motion playback in reverse direction, and pressing the [I▸] Button starts slow motion playback in forward direction.

Scenes recorded in the SP Mode are played back at approximately 1/5th of the normal speed.
Scenes recorded in the LP Mode are played back at approximately 1/3rd of the normal speed.

- During slow motion playback in reverse direction, the Time Code Indication may not be accurate.

Resuming Normal Playback

Press the Play Button [▶].
Playback continues with normal speed.

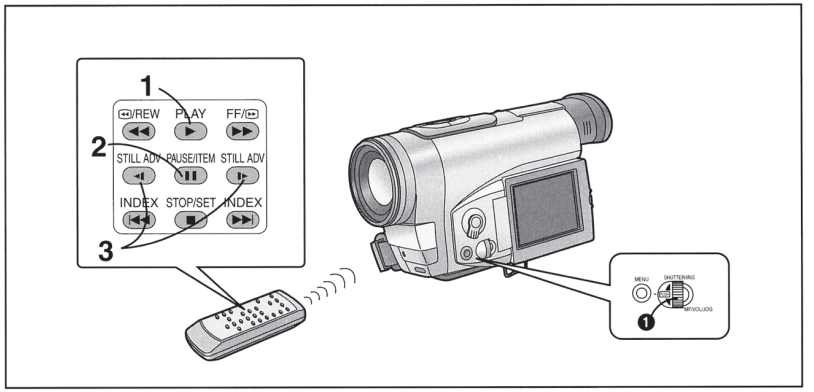

Playing Back Still Pictures and Advancing Them One by One

(Still Playback/Still Advance Playback)

You can freeze the action during playback and advance the still pictures one by one.

1 Press the Play Button [▶].

2 Press the Pause Button [❚❚].
The playback picture stops in the Still Playback Mode.

3 Press the Slow Motion/Still Advance Button [◂❚] or [❚▸] on the Remote Controller.
Pressing the [◂❚] Button advances the still picture one by one in reverse direction. Pressing the [❚▸] Button advances the still picture one by one in forward direction.

- Each press of the [◂❚] Button advances to the next still picture in reverse direction. Each press of the [❚▸] Button advances to the next still picture in forward direction. Keeping either button pressed continuously advances the still pictures one by one until you release the button.
- If you leave the Movie Camera in the Still Playback Mode for more than 6 minutes, it switches over to the Stop Mode to protect the video heads against excessive wear.
- During Still Advance Playback, the Time Code Indication may not be accurate.
- During Still Playback, adjusting the sound volume is not possible.

Resuming Normal Playback

Press the Play Button [▶].
Playback continues with normal speed.

Using the Jog Dial (Jog Playback)

By turning the Jog Dial ([PUSH] Dial) ❶ on the Movie Camera in the Still Playback Mode, you can advance the still pictures one by one in forward or reverse direction.

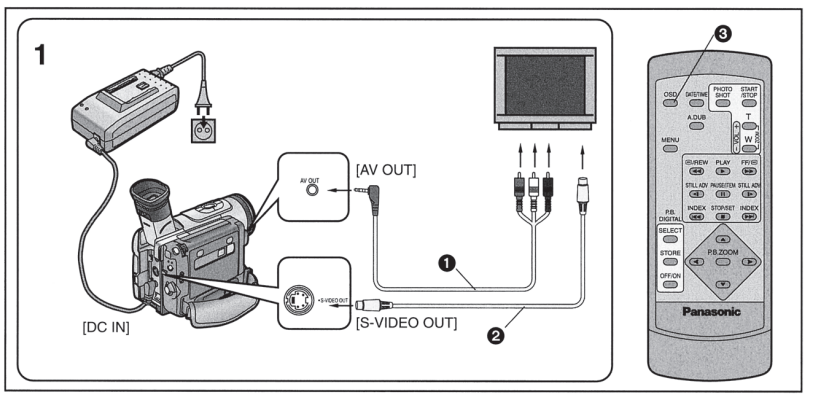

Playing Back on a TV

By connecting the Movie Camera to a TV, you can watch playback of the recorded scenes on the TV screen.

1 Connect the [AV OUT] Socket on the Movie Camera with the Video and Audio Input Sockets on the TV.
Use the AV Cable ❶ to connect to the TV. If your TV is equipped with an S-Video Socket, also connect the S-Video Cable ❷.

- Before connecting, turn off both the Movie Camera and the TV.
- If a cassette recorded with copyright protection signal is played back, the screen becomes black. However, scenes recorded with this Movie Camera do not contain a copyright protection signal.
- When using the S-Video Cable to watch playback on the TV, use the AC Adaptor to supply power to the Movie Camera, as the S-Video Cable and the Battery cannot be connected at the same time.

Making the Indications Appear on the TV Screen

Press the [OSD] Button ❸ on the Remote Controller.
The On-Screen Indications also appear on the TV screen.

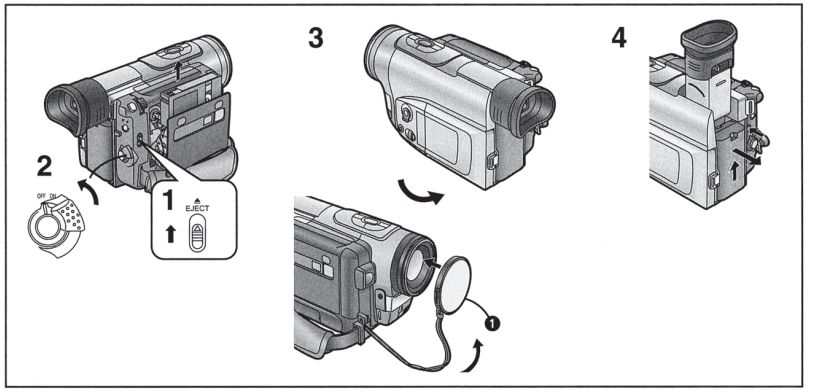

After Use

1 Take out the cassette. (➔ 22)

2 Set the [OFF/ON] Switch to [OFF].

3 Close the LCD Monitor.

4 Remove the Battery and retract the Finder. (➔ 18)

Attaching the Lens Cap

After use, attach the supplied Lens Cap ❶ to the Lens to protect it.

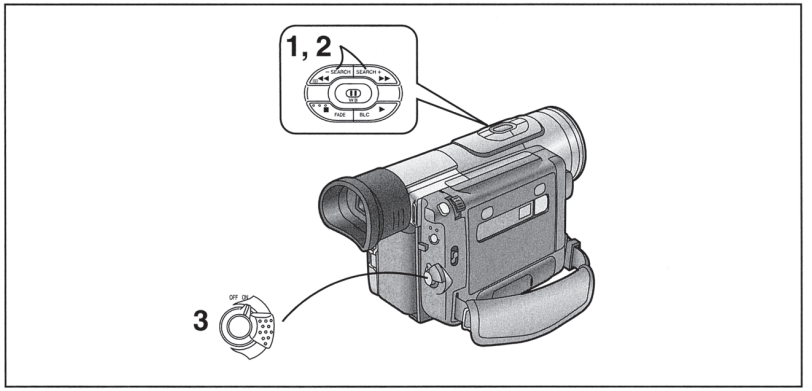

Viewing Recorded Scenes During Recording Pause (Camera Search)

You can view recorded scenes when the Movie Camera is in the Recording Pause Mode.
The Camera Search Function is convenient to search for a scene from which you want to start recording a new scene with smooth scene-to-scene transition.

1 Keep the Reverse Search Button [−SEARCH] or the Forward Search Button [SEARCH+] pressed for more than 1 second.

- Pressing the [−SEARCH] Button plays back the picture in reverse direction.
- Pressing the [SEARCH+] Button plays back the picture in forward direction.

Starting to Record from the Desired Position

2 Release the pressed Search Button.
The Movie Camera is in the Recording Pause Mode.

3 Press the Start/Stop Button to start recording.
The Movie Camera starts recording a new scene with smooth scene-to-scene transition.

- In the Camera Search Mode, the picture may contain mosaic-like patterns. However, this is a phenomenon particular to digital video and completely normal.
- If the Recording Speed Mode (SP/LP) of the previous and the new recording are different, the playback picture may be distorted.

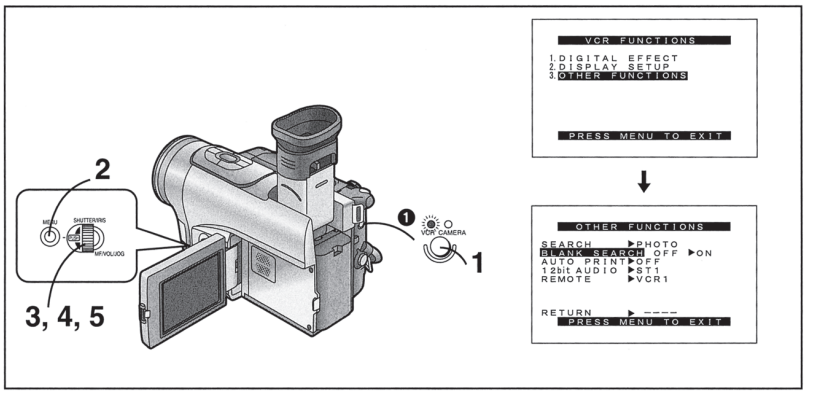

Searching for the End of the Recorded Part on a Cassette (Blank Search)

With the Blank Search Function, you can quickly locate the end of the recorded part on a cassette (or a blank part between recordings).

1 Press the [VCR/CAMERA] Button so that the [VCR] Lamp lights. ❶

2 Press the [MENU] Button.
The [VCR FUNCTIONS] Main-Menu appears.

3 Turn the [PUSH] Dial to select [OTHER FUNCTIONS] and then press the [PUSH] Dial.
The [OTHER FUNCTIONS] Sub-Menu appears.

4 Turn the [PUSH] Dial to select [BLANK SEARCH].

5 Press the [PUSH] Dial to select [ON].
Approximately 1 second before the end of the last recorded scene, the Movie Camera switches over to the Still Playback Mode.

- If there is no blank part on a cassette, the Movie Camera stops at the end of the tape.
- When the Blank Search has finished, you can press the [VCR/CAMERA] Button so that the [CAMERA] Lamp lights, and then start recording. The new scene is recorded with a smooth transition from the last to the new scene.
- To cancel the Blank Search before it finishes, press the [■] Button.

Ⓐ

OTHER FUNCTIONS
SEARCH ▶PHOTO SCENE
BLANK SEARCH ▶OFF
AUTO PRINT ▶OFF
12bit AUDIO ▶ST1
REMOTE ▶VCR1
RETURN ▶ ----
PRESS MENU TO EXIT

Ⓑ

OTHER FUNCTIONS
REC SPEED ▶SP
AUDIO REC ▶12bit
WIND CUT ▶OFF
SCENEINDEX ▶2HOUR DAY
REMOTE ▶VCR1
REC LAMP ▶OFF
BEEP SOUND ▶OFF
RETURN ▶ ----
PRESS MENU TO EXIT

Searching for the Beginning of Recorded Scenes Marked with Index Signal (Index Search)

To allow easy searching for desired scenes, this Movie Camera automatically records index signals during recording as follows:

❶ Photoshot Index Signal
To search for still pictures recorded in the Photoshot Mode **(➔ 38)** and to use for automatic printing **(➔ 124)**.
A photoshot index signal is automatically recorded every time you record a still picture in the Photoshot Mode.
However, in the Continuous Photoshot Mode **(➔ 38)**, no photoshot index signals are recorded.

❷ Scene Index Signal
To search for the beginning of recorded scenes.
A scene index signal is automatically recorded in the following cases:

- When you start recording after inserting a cassette. However, if you switch the Movie Camera from the VCR Mode over to the Camera Mode or set the date and/or time before you start recording, no index signal is recorded.
- According to the setting of [SCENEINDEX] on the [OTHER FUNCTIONS] Sub-Menu of the [CAMERA FUNCTIONS] Main-Menu:
  [2HOUR]: An index signal is recorded when recording is restarted after a lapse of more than 2 hours.
  [DAY]: An index signal is recorded when recording is restarted after the date has changed since the last recording.

(While an index signal is being recorded, the [INDEX] Indication flashes for a few seconds.)

Ⓐ:[OTHER FUNCTIONS] Sub-Menu in the VCR Mode
Ⓑ:[OTHER FUNCTIONS] Sub-Menu in the Camera Mode

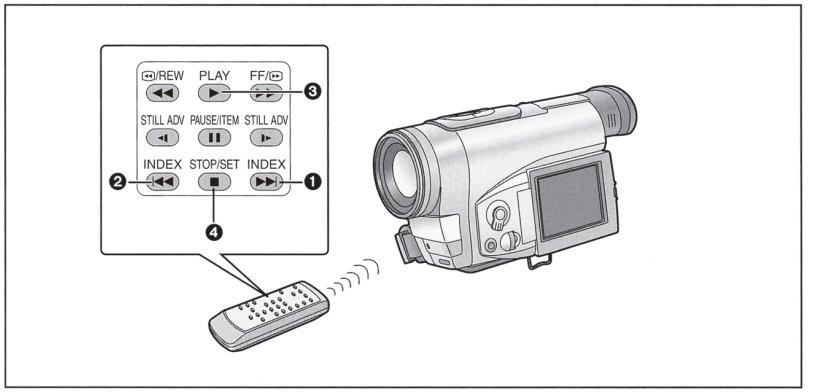

Searching for Photoshot Pictures
(Photoshot Index Search)

- Press the [VCR/CAMERA] Button on the Movie Camera so that the [VCR] Lamp lights.
- Set [SEARCH] on the [OTHER FUNCTIONS] Sub-Menu to [PHOTO].

Photoshot Index Search in Forward Direction
Press the Index Button [▶▶|] ❶ on the Remote Controller.

Photoshot Index Search in Reverse Direction
Press the Index Button [|◀◀] ❷ on the Remote Controller.

- At every press of the corresponding button, the tape is fast-forwarded or rewound to the next still picture recorded in the Photoshot Mode.
  After reaching the next still picture, the still picture is played back continually, however the sound only for approximately 4 seconds. (If you leave the Movie Camera in the Still Playback Mode for more than 6 minutes, it switches over to the Stop Mode to protect the video heads against excessive wear.)

- The Photoshot Index Search may not work correctly for still pictures recorded near the beginning of the tape.
- As no photoshot index signals are recorded for still pictures recorded in the Continuous Photoshot Mode **(➔ 38)**, the Photoshot Index Search Function cannot be used to search for these still pictures.
- If you keep the [|◀◀] or [▶▶|] Button pressed for more than 2 seconds, the Intro Search Function is activated and it plays back all still pictures recorded in the Photoshot Mode on the cassette one after another for a few seconds each.
  (To cancel the Intro Search Function, press the Play Button [▶] ❸ or the Stop Button [■] ❹.)

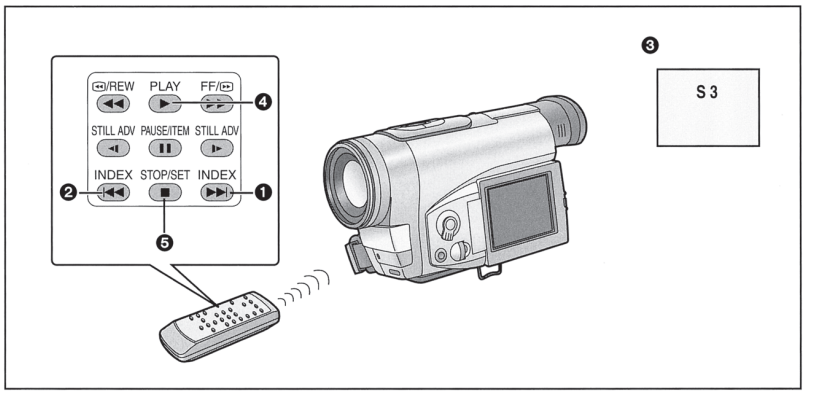

Searching for the Beginning of Recorded Scenes
(Scene Index Search)

- Press the [VCR/CAMERA] Button on the Movie Camera so that the [VCR] Lamp lights.
- Set [SEARCH] on the [OTHER FUNCTIONS] Sub-Menu to [SCENE].

Scene Index Search in Forward Direction
Press the Index Button [▶▶|] ❶ on the Remote Controller.

Scene Index Search in Reverse Direction
Press the Index Button [|◀◀] ❷ on the Remote Controller.

- When you briefly press the corresponding button once, the [S 1] Indication appears and the search for the next scene marked with an index signal starts. After the Scene Index Search has started, every time you press the button, the indication changes successively from [S 2] to [S 9], and the beginning of the scene corresponding to the selected number is located. ❸ After reaching the desired scene, playback starts automatically. (At a time, Scene Index Search in forward or reverse direction is possible up to the ninth scene marked with index signal from the present tape position.)

- If the interval between two scene index signals is less than 1 minute, the Scene Index Search may not work correctly.
- The Scene Index Search may not work correctly for scenes recorded near the beginning of the tape.
- If you keep the [|◀◀] or [▶▶|] Button pressed for more than 2 seconds, the Intro Search Function is activated and it plays back the beginning of all scenes marked with an index signal on the cassette one after another for a few seconds each.
  (To cancel the Intro Search Function, press the Play Button [▶] ❹ or the Stop Button [■] ❺.)

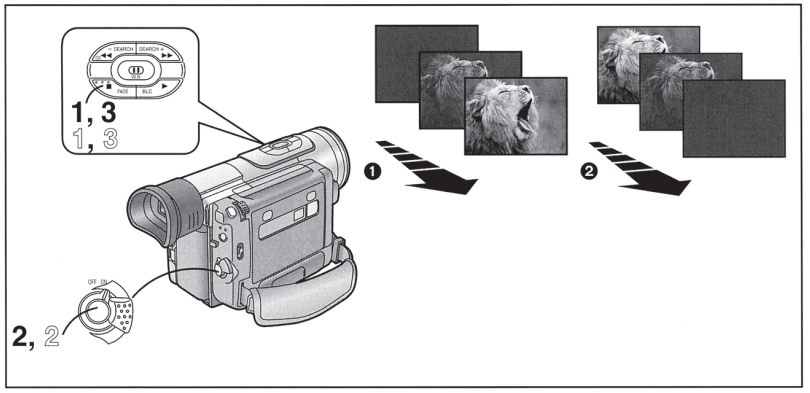

Fading In/Out

Fading In ❶
Fading-in lets you make the picture and sound appear gradually from a black screen at the beginning of a scene.

1 **With the Movie Camera in the Recording Pause Mode, keep the Fade Button [FADE] pressed.**
The picture gradually disappears.

2 **When the picture has completely disappeared, press the Start/Stop Button to start recording.**

3 **Approximately 3 seconds after the recording has started, release the Fade Button [FADE].**
The picture gradually appears again.

Fading Out ❷
Fading-out lets you make the picture and sound disappear gradually into a black screen at the end of a scene.

1 **During recording, keep the Fade Button [FADE] pressed.**
The picture gradually disappears.

2 **After the picture has completely disappeared, press the Start/Stop Button to stop recording.**
The Movie Camera is in the Recording Pause Mode.

3 **Release the Fade Button [FADE].**

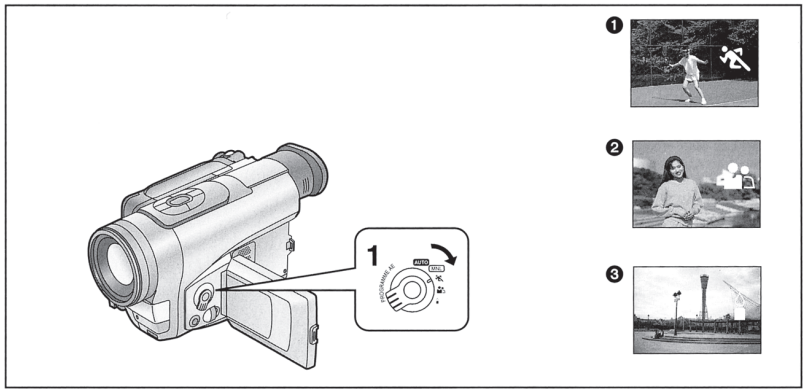

Recording In Special Situations
(Programme AE)

This function lets you select Automatic Exposure settings optimized for special recording situations.

1 Set the Mode Selector Switch to the desired mode ([ ], [ ] or [ ]).
The indication of the selected mode appears.

[ ] Sports Mode ❶
To record scenes with fast-moving subjects such as sports scenes.

[ ] Portrait Mode ❷
To make subjects stand out sharply from the background.

[ ] Low Light Mode ❸
To record dark scenes more brightly.

Cancelling the Programme AE Function
Set the Mode Selector Switch to [AUTO].

It is not possible to adjust the shutter speed **(➜ 90)** or the iris value **(➜ 92)** when one of the Programme AE Modes is selected.

Sports Mode
- When playing back on a VCR scenes that you have recorded in the Sports Mode, you can enjoy slow motion and still playback of very sharp images with fine details.
- During normal playback, movements in the picture may not be smooth.
- Avoid recording under fluorescent, mercury-vapour or natrium lamps in this mode, as the colour and the brightness of the playback picture might fluctuate.
- When recording subjects lit by strong lights or with much light reflection, the playback picture may contain vertical streaks of light.
- When the scene is not sufficiently lit, the [ ] Indication flashes.
- When using this mode for recording indoors, the playback picture may flicker.
- It is not possible to use the Sports Mode [ ] together with the Gain-up Mode [GAINUP].

Portrait Mode
- When using this mode for recording indoors, the playback picture may flicker.
- It is not possible to use the Portrait Mode [ ] together with the Gain-up Mode [GAINUP].

Low Light Mode
- It may not be possible to sufficiently brighten up extremely dark scenes.

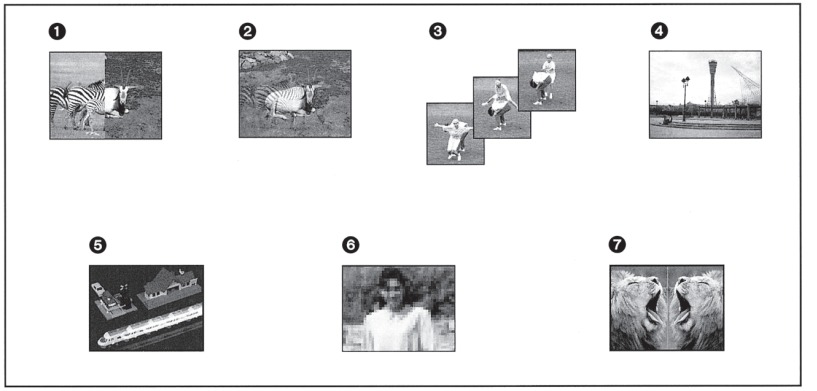

Recording with Special Effects
(Digital Effects)

In addition to the Super Image Stabilizer and Digital Zoom, this Movie Camera offers you a total of 11 different digital effect modes to make it easy to enhance your scenes in many creative ways.

Digital Effects 1 [EFFECT1]

❶ **Wipe Mode [WIPE]**
It gradually replaces a picture of the last previously recorded scene with the picture of the new scene, like drawing a curtain. For details, **(➜ 78)**.

❷ **Mix Mode [MIX]**
It gradually fades out the picture of the last previously recorded scene while fading in the picture of the new scene. For details, **(➜ 80)**.

❸ **Strobe Mode [STROBE]**
It records the pictures with a stroboscope-like effect.

❹ **Gain-up Mode [GAIN UP]**
It electronically brightens up the picture.
In this mode, adjust the focus manually.

❺ **Trailing Effect Mode [TRACER]**
The picture is recorded with a trailing effect.

❻ **Mosaic Mode [MOSAIC]**
The picture becomes mosaic-like.

❼ **Mirror Mode [MIRROR]**
The right half of the picture is a mirror image of the left half.

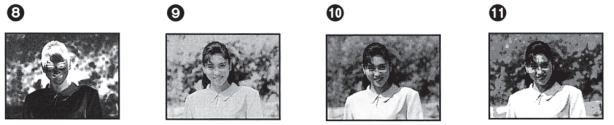

Digital Effects 2 [EFFECT2]

❽ Negative Mode [NEGA]
The recorded pictures have reversed colours similar to photographic negatives.

❾ Sepia Mode [SEPIA]
Scenes are recorded with a brown tint similar to the colour of old photographs.

❿ Black & White Mode [B/W]
The picture is recorded in black and white.

⓫ Solarisation Mode [SOLARI]
The picture is recorded with an effect similar to a painting.

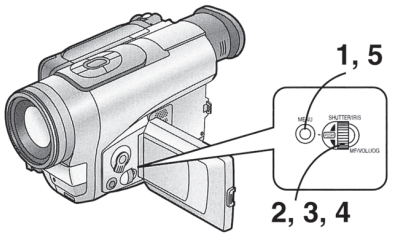

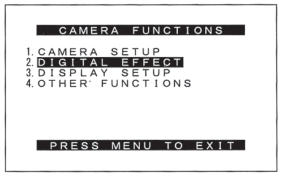

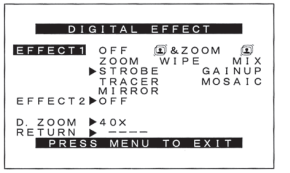

Recording with Special Effects
(Digital Effects) (Continued)

Selecting the Desired Digital Effect

1 Press the [MENU] Button.
The [CAMERA FUNCTIONS] Main-Menu appears.

2 Turn the [PUSH] Dial to select [DIGITAL EFFECT] and then press the [PUSH] Dial.
The [DIGITAL EFFECT] Sub-Menu appears.

3 Turn the [PUSH] Dial to select [EFFECT1] or [EFFECT2].

4 Press the [PUSH] Dial to select the desired digital effect.

5 Press the [MENU] Button to exit the menu.
The picture now has the selected digital effect. However, the effect of the Wipe Function and the Mix Function only become visible when actually recording in the respective mode. **(➔ 78, 80)**

- If you have set [EFFECT1] on the [DIGITAL EFFECT] Sub-Menu to [GAINUP], you need to adjust the focus manually; however, adjusting the shutter speed and selecting a white balance mode are not possible.
- If you have set [EFFECT2] on the [DIGITAL EFFECT] Sub-Menu to [B/W] or [SEPIA], changing the selected white balance mode is not possible. **(➔ 82)**
- It is not possible to use the Sports Mode [ ] or the Portrait Mode [ ] together with the Gain-up Mode [GAINUP].

Cancelling the Digital Effect

Set [EFFECT1] or [EFFECT2] on the [DIGITAL EFFECT] Sub-Menu to [OFF].

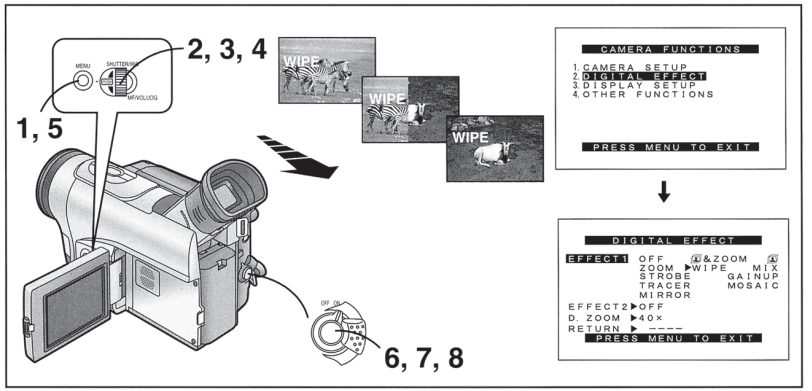

Recording with Special Effects
(Digital Effects) (Continued)

■ Wipe Mode
It gradually replaces a still picture of the last recorded scene with the moving picture of the new scene, like drawing a curtain.

1 **Press the [MENU] Button.**

2 **Turn the [PUSH] Dial to select [DIGITAL EFFECT] and then press the [PUSH] Dial.**
The [DIGITAL EFFECT] Sub-Menu appears.

3 **Turn the [PUSH] Dial to select [EFFECT1].**

4 **Press the [PUSH] Dial to select [WIPE].**

5 **Press the [MENU] Button to exit the menu.**
The [WIPE] Indication appears.

6 **Press the Start/Stop Button to start recording.**
The normal recording starts.

7 **Press the Start/Stop Button to pause recording.**
The last picture is stored in memory.
The [WIPE] Indication changes to [WIPE].

8 **Press the Start/Stop Button to start recording again.**
The last picture of the previous scene is gradually replaced by the new scene.

If you perform any of the following operations after performing Step 7, the picture stored in memory is erased and the Wipe Function cannot be used:
- Selecting any other digital function in [EFFECT1] or in [EFFECT2] on the [DIGITAL EFFECT] Sub-Menu.
- Using the Camera Search Function.

- Instead of performing the Wipe from the last recorded picture, you can store a still picture in memory by pressing the [PHOTOSHOT] Button after Step 5 above and then perform Step 8.

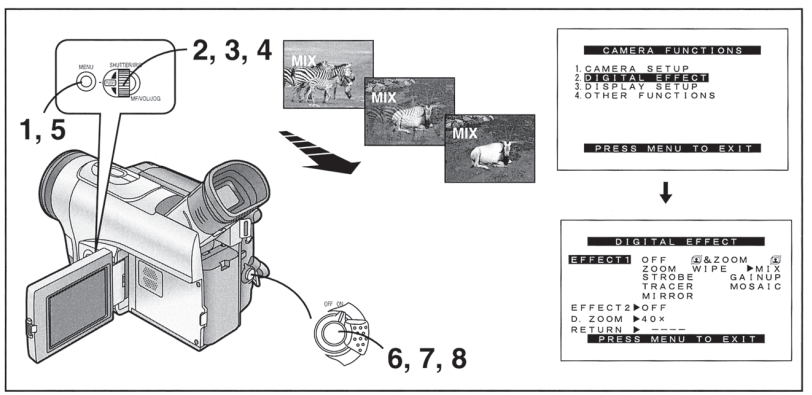

Recording with Special Effects
(Digital Effects) (Continued)

■ Mix Mode
It gradually fades out a still picture of the last recorded scene while fading in the moving picture of the new scene.

1 **Press the [MENU] Button.**

2 **Turn the [PUSH] Dial to select [DIGITAL EFFECT] and then press the [PUSH] Dial.**
The [DIGITAL EFFECT] Sub-Menu appears.

3 **Turn the [PUSH] Dial to select [EFFECT1].**

4 **Press the [PUSH] Dial to select [MIX].**

5 **Press the [MENU] Button to exit the menu.**
The [MIX] Indication appears.

6 **Press the Start/Stop Button to start recording.**
The normal recording starts.

7 **Press the Start/Stop Button to pause recording.**
The last picture is stored in memory.
The [MIX] Indication changes to [MIX].

8 **Press the Start/Stop Button to start recording again.**
The last picture gradually fades out while the new scene fades in.

If you perform any of the following operations after performing Step 7, the picture stored in memory is erased and the Mix Function cannot be used:
- Selecting any other digital function in [EFFECT1] or in [EFFECT2] on the [DIGITAL EFFECT] Sub-Menu.
- Using the Camera Search Function.

- Instead of performing the Mix from the last recorded picture, you can store a still picture in memory by pressing the [PHOTOSHOT] Button after Step 5 above and then perform Step 8.

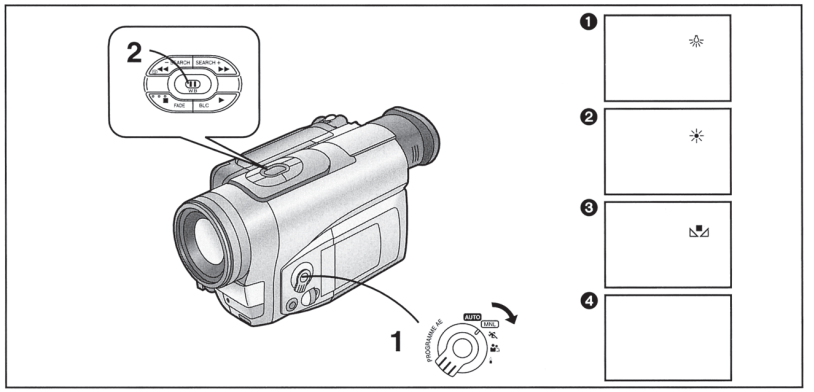

Recording with Natural Colours
(White Balance)

This Movie Camera automatically adjusts the white balance to ensure that the pictures are recorded with natural colours. For certain types of subjects and lighting conditions, however, this Auto White Balance Adjustment Mode may not be able to ensure natural colours **(➜ 166, 168)**. In these cases, you can select either one of the 3 preset modes explained below (indoor, outdoor, or the last manually adjusted white balance setting), or you can manually adjust the white balance **(➜ 84)**.

1 **Set the Mode Selector Switch to [MNL].**
The [MNL] Indication appears.

2 **Press the White Balance Button [W.B].**
Repeatedly press the [W.B] Button to select the desired White Balance Mode.

The modes change in the following order:
❶ Indoor Mode
(recording under incandescent lamp) [☆]
❷ Outdoor Mode [☀]
❸ Last manually adjusted White Balance setting **(➜ 84)** [▣]
❹ Automatic White Balance Adjustment
(no indication)

- Be sure to remove the Lens Cap before setting the [OFF/ON] Switch to [ON]. If the Lens Cap is still attached to the Lens when the [CAMERA] Lamp lights, the automatic white balance Adjustment may not be precise.
- If you have set [EFFECT1] on the [DIGITAL EFFECT] Sub-Menu of the [CAMERA FUNCTIONS] Main-Menu to [GAINUP], or if you have set [EFFECT2] to [SEPIA] or [B/W], it is not possible to change the white balance.
- To change the white balance mode, the Movie Camera must be set within the optical zoom range (1× – 20×). If you try to change it in the digital zoom range, the [▣] Indication flashes.

Returning to the Auto White Balance Adjustment Mode
Press the [W.B] Button repeatedly until none of the White Balance Mode Indications ([☆], [☀], [▣]) are displayed any more. Or, set the Mode Selector Switch to [AUTO].

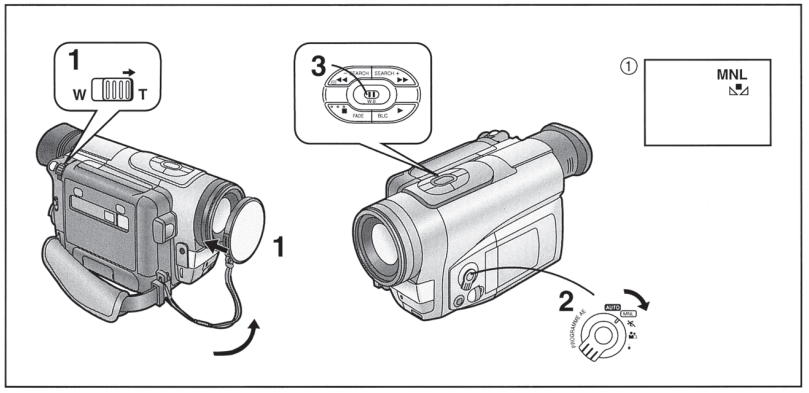

Adjusting the White Balance Manually

Use the Manual White Balance Adjustment Mode for all types of lighting outside the range ❶ **(➜ 168)**, as the Auto White Balance Adjustment Mode can only ensure natural colours for the types of lighting within that range. For optimum results under almost any type of lighting, we recommend that you adjust the white balance manually for each new scene.

1 Attach the Lens Cap and zoom in until the entire screen becomes white.

2 Set the Mode Selector Switch to [MNL].
The [MNL] Indication appears.

3 Keep the [W.B] Button pressed until the [◪] Indication ① stops flashing and remains lit.

Returning to the Auto White Balance Adjustment Mode
Press the [W.B] Button repeatedly until none of the White Balance Mode Indications ([☼], [☀], [◪]) are displayed any more. Or, set the Mode Selector Switch to [AUTO].

In the Following Cases, the [◪] Indication Flashes:

When you recall the last manually adjusted white balance setting
- The flashing indication tells you that the white balance setting you last adjusted is still maintained. This setting is kept until you adjust the white balance again.

When you are trying to adjust the white balance in a dark place
- Under weak illumination, precise manual white balance adjustment may not be possible. In this case, set the Mode Selector Switch to [AUTO] to record with automatic white balance adjustment.

During manual adjustment of the white balance
- The [◪] Indication flashes while the white balance is being adjusted. When the white balance adjustment is finished, the [◪] Indication stops flashing and remains lit.
- It is not possible to manually adjust the white balance or select any of the preset white balance modes when you have zoomed to 20× or higher (digital zoom range), when [EFFECT1] on the [DIGITAL EFFECT] Sub-Menu is set to [GAINUP] and when [EFFECT2] is set to [SEPIA] or [B/W].
- We recommend that you adjust the white balance anew whenever there is a change in the recording situation.

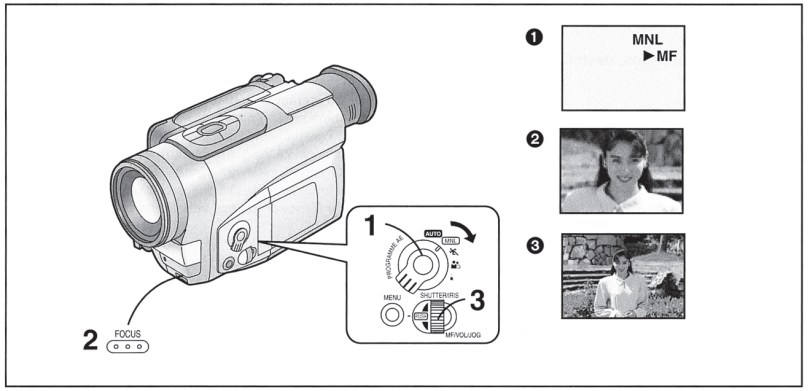

Focusing on the Subject Manually
(Manual Focus)

This makes it possible to adjust the focus manually for subjects and recording situations for which automatic focusing is not precise.

1 **Set the Mode Selector Switch to [MNL].**
The [MNL] Indication appears.

2 **Press the [FOCUS] Button.**
The [►MF] Indication (Manual Focus Mode) ❶ appears.

3 **Turn the [MF] Dial to adjust the focus.**

Returning to the Automatic Focusing Mode
Press the [FOCUS] Button to make the [►MF] Indication disappear. Or, set the Mode Selector Switch to [AUTO].

Hint for Manual Focus Adjustment
- If you adjust the focus in the wide-angle setting, the subject may go out of focus when you enlarge it. Therefore, enlarge the subject ❷ before you adjust the focus, so that the picture remains focused when you zoom out ❸.
- If you want to adjust the focus manually after having adjusted the shutter speed **(➜ 90)** or the iris **(➜ 92)**, be sure to press the [►MF] Indication appear, even if the [MF] Indication is displayed.

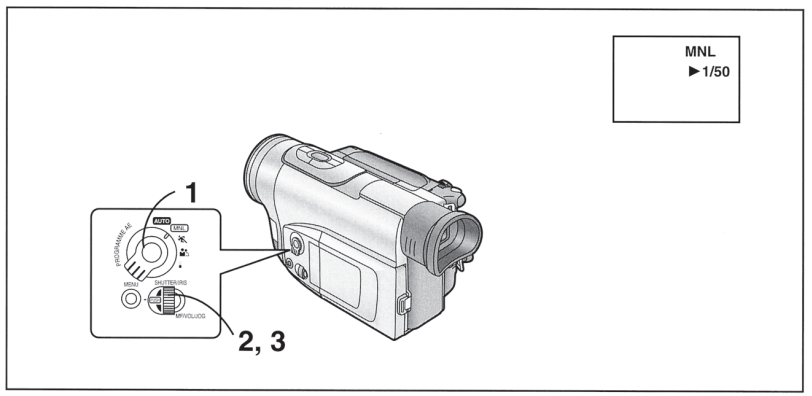

Adjusting the Shutter Speed Manually

To achieve special creative effects or to cope with special lighting situations or fast-action scenes, you can adjust the shutter speed manually.

1 **Set the Mode Selector Switch to [MNL].**
The [MNL] Indication appears.

2 **Press the [PUSH] Dial.**
The Shutter Speed Indication appears.
You can change between the Shutter Speed Indication and the Iris (F Number) **(➜ 92)** Indication by repeatedly pressing the [PUSH] Dial.

3 **Turn the [PUSH] Dial to adjust the shutter speed.**

Range of Shutter Speed Adjustment
1/50–1/4000 s
The standard shutter speed is 1/50 s.
The nearer to [1/4000] a setting you select, the faster the shutter speed becomes.

Range of Shutter Speed Adjustment
1/50–1/4000 s
The standard shutter speed is 1/50 s.
The nearer to [1/4000] a setting you select, the faster the shutter speed becomes.

- The playback picture of subjects lit by strong lights or with much light reflection may contain vertical streaks of light.
- During normal playback, the scene-to-scene transitions may not be smooth.
- Avoid recording under fluorescent lamps, mercury lamps or natrium lamps, as they can cause unstable colours and brightness of the playback picture.
- When using the Gain-up Mode **(➜ 72)** or any of the Programme AE Modes **(➜ 68)**, it is not possible to adjust the shutter speed. If the shutter speed was manually adjusted, this setting is cancelled.
- Adjust the shutter speed according to the recording situation.

Returning to the Normal Shutter Speed
Set the Mode Selector Switch to [AUTO].

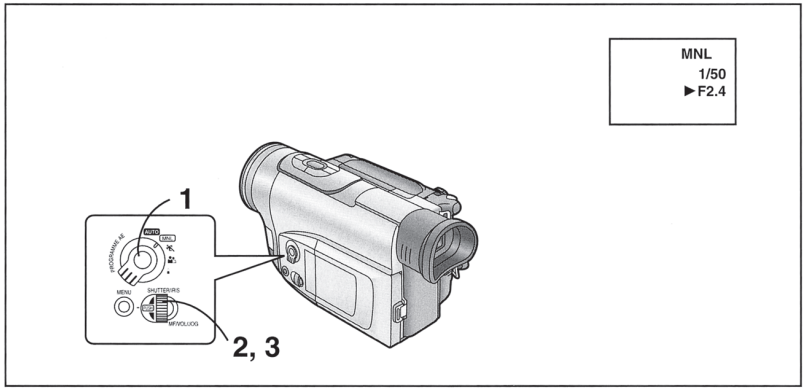

Adjusting the Iris (F Number) Manually

To achieve special creative effects or to cope with special lighting situations, you can adjust the iris (F number) manually.

1 **Set the Mode Selector Switch to [MNL].**
The [MNL] Indication appears.

2 **Press the [PUSH] Dial twice.**
The [►F] Indication appears.
You can change between the Iris (F Number) Indication and the Shutter Speed Indication by repeatedly pressing the [PUSH] Dial.

3 **Turn the [PUSH] Dial to adjust the iris.**

Range of Iris Adjustment
CLOSE (Closed) ⟶ F16…F1.6 ⟶ OP (Opened)
+0 dB…OP+18 dB
The nearer to [CLOSE] a value you select, the darker the picture becomes.
The nearer to [OP+18 dB] a value you select, the brighter the picture becomes.
The figures with +dB show the Gain-up value. If you increase the value too much, the picture quality deteriorates.

Returning to the Normal Iris Value (F Number)
Press the [PUSH] Dial one time to make the [►F] Indication disappear. Or set the Mode Selector Switch to [AUTO].

- Increasing the Gain-up value also increases the graininess of the picture.
- Manually adjusting the shutter speed after performing manual iris adjustment changes the iris back to automatic adjustment. Therefore, if you want to adjust both the shutter speed and iris manually, be sure to adjust the shutter speed first. **(➜ 90)**
- Manual iris adjustment is not possible when the Mode Selector Switch is set to any position other than [MNL].

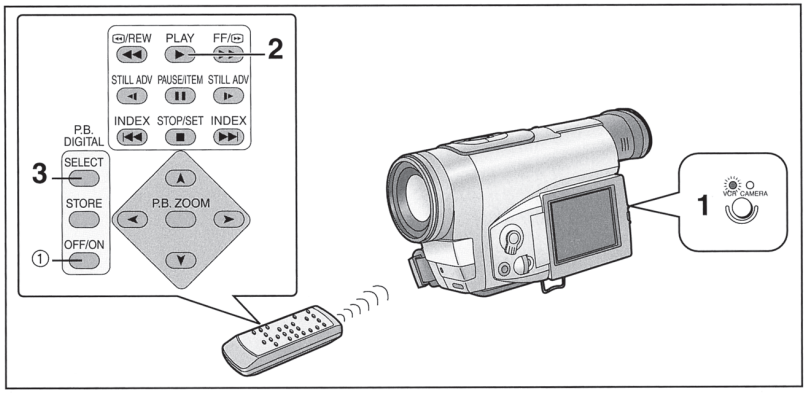

Playing Back with Special Effects

(Playback Digital Effects)

There are 10 different modes available for adding special digital picture effects to your recordings during playback. They are identical to the Digital Effects 1 and 2 **(➜ 72, 74)** that can be used during recording.

❶ WIPE ❷ MIX ❸ STROBE
❹ NEGA ❺ SEPIA ❻ B/W
❼ TRACER ❽ SOLARI ❾ MOSAIC
❿ MIRROR

1 Press the [VCR/CAMERA] Button so that the [VCR] Lamp lights.

2 Press the Play Button [▶].

3 Press the [SELECT] Button on the Remote Controller to select the desired digital effect.

Repeatedly pressing the [SELECT] Button changes the selected digital effect in the order ❶ to ❿. Selecting a digital effect is also possible by setting [EFFECT SELECT] on the [DIGITAL EFFECT] Sub-Menu of the [VCR FUNCTIONS] Main-Menu to the desired effect.

Suspending the Playback Digital Effect Temporarily

You can suspend and re-activate the digital effect by repeatedly pressing the [OFF/ON] Button ①. Suspending a digital effect is also possible by setting [EFFECT] on the [DIGITAL EFFECT] Sub-Menu to [OFF], and later to [ON] to re-activate it. When the digital effect is temporarily suspended, the indication of the selected effect flashes.

Cancelling the Digital Effect

Press the [SELECT] Button on the Remote Controller to make the displayed digital effect indication disappear. Or, set [EFFECT SELECT] on the [DIGITAL EFFECT] Sub-Menu to [OFF].

When you want to output the signal of the picture with a digital effect added during playback, use the [AV OUT] Socket **(➜ 14)**. This signal cannot be output from the DV Terminal **(➜ 14)** or the Digital Still Picture Terminal **(➜ 12)**.

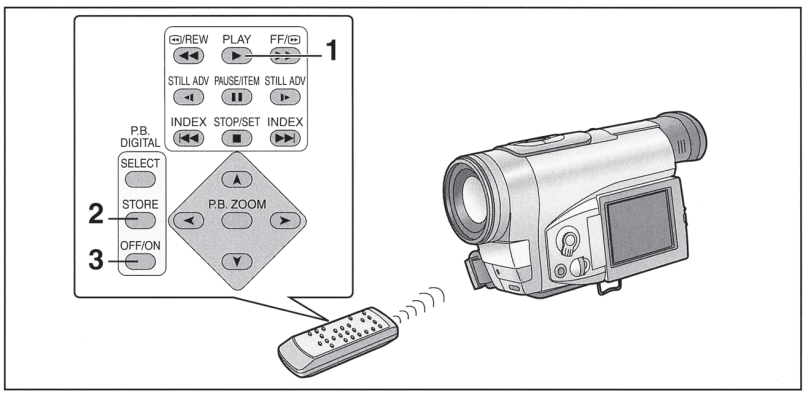

Playing Back with Special Effects

(Playback Digital Effects) (Continued)

■ Wipe Function and Mix Function

After having selected [WIPE] or [MIX] in Step 3 on page 94:

1 Press the [▶] Button to start playback.

2 Press the [STORE] Button at the moment that you want to store as still image in memory.

The [WIPE] or [MIX] Indication appears and the picture is stored in memory.

3 Press the [OFF/ON] Button at the scene at which you want to use a Wipe or Mix effect.

The scenes change with a Wipe or Mix effect.

- Operating the Wipe Function and the Mix Function during playback is only possible with the Remote Controller.
- It is not possible to add a Wipe or Mix effect during playback of an unrecorded part on the tape.
- If you press the [OFF/ON] Button while the Wipe or Mix is being performed, the effect is paused at that point. If you press the [OFF/ON] Button again, the effect resumes.

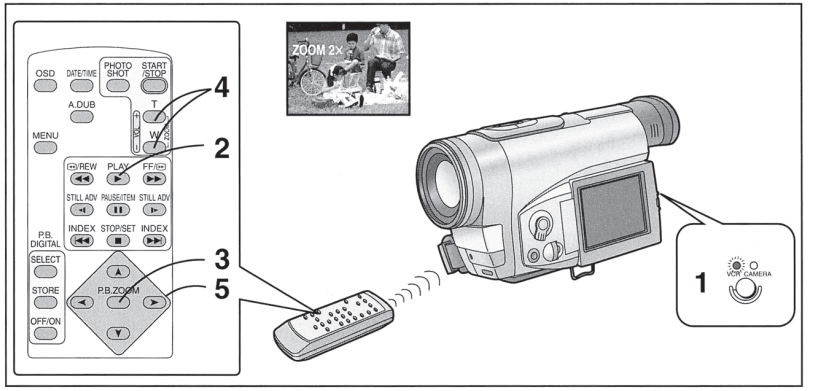

Enlarging the Playback Picture

(Playback Zoom)

With this function, you can enlarge a part of the picture by up to 10 times during playback.

1 Press the [VCR/CAMERA] Button so that the [VCR] Lamp lights.

2 Press the Play Button [▶].

3 Press the Playback Zoom Button [P.B.ZOOM] on the Remote Controller.

The center part of the picture is enlarged about 2 times.

Changing the Zoom Magnification

4 Press the [W] or [T] Zoom Button on the Remote Controller to change the magnification.

You can increase the magnification up to 10×.

Shifting the Enlarged Part of the Picture

5 Press the Arrow Button (▲, ◀, ▶, ▼) on the Remote Controller according to the direction in which you want to shift the enlarged part of the picture.

Cancelling the Playback Zoom Function

Press the [P.B.ZOOM] Button on the Remote Controller.

- In the Playback Zoom Mode, it is not possible to adjust the sound volume.
- Turning the Movie Camera off or switching it from the VCR Mode over to the Camera Mode automatically cancels the Playback Zoom Mode.
- Even while you are using the Playback Zoom Function, the picture output from the DV Terminal **(➜ 14)** and the Digital Still Picture Terminal **(➜ 12)** is not enlarged.
- The more the picture is enlarged, the more its picture quality deteriorates.
- It is not possible to use the Wipe Mode, Mix Mode, Tracer Mode or Mirror Mode of the Digital Effects and the Playback Zoom Function at the same time. **(➜ 94)**

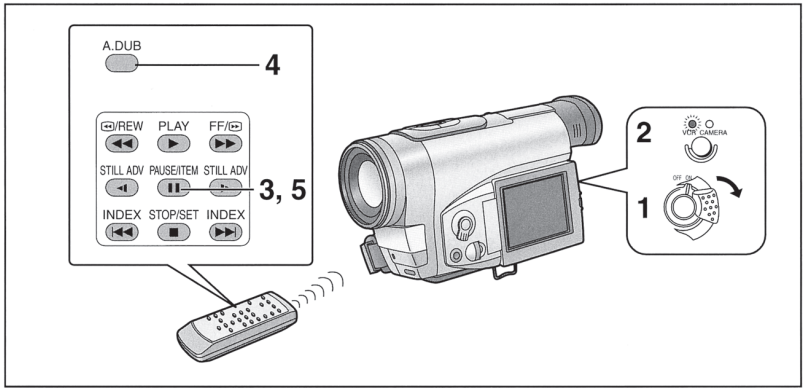

Adding New Sound on a Recorded Cassette (Audio Dubbing)

To perform audio dubbing, the Remote Controller is necessary.
You can add music or narration on a recorded cassette.

- If you perform audio dubbing onto a tape that was recorded with [AUDIO REC] on the [OTHER FUNCTIONS] Sub-Menu of the [CAMERA FUNCTIONS] Main-Menu set to [16bit], the original sound is erased. (If you intend to perform audio dubbing but also want to keep the original sound, be sure to set [AUDIO REC] to [12bit] before making the original recording.)
- It is not possible to perform audio dubbing onto recordings made in the LP Mode. **(➜ 24)**

1 Insert the recorded cassette and set the [OFF/ON] Switch to [ON].
Make sure that the prevention slider of the cassette is set to [REC].

2 Press the [VCR/CAMERA] Button so that the [VCR] Lamp lights.

3 At the point from which you want to insert the new sound, switch the Movie Camera over to the Still Playback Mode.
Using Cue Playback or Review Playback makes it easy to search for this point.

4 Press the [A.DUB] Button on the Remote Controller.

5 Press the Pause Button [❚❚] on the Remote Controller to start audio dubbing.

Stopping Audio Dubbing

Press the Pause Button [❚❚] on the Remote Controller.
The Movie Camera is again in the Still Playback Mode.

Playing Back the Sound Recorded with Audio Dubbing

Depending on the setting selected for [12bit AUDIO] on the [OTHER FUNCTIONS] Sub-Menu of the [VCR FUNCTIONS] Main-Menu, the sound added with audio dubbing and the original sound are played back as follows:

ST1: The original sound alone is played back.
ST2: The dubbed sound alone is played back.
MIX: The original sound and the sound added with audio dubbing are played back together.

- It is not possible to perform audio dubbing on an unrecorded part of the tape.
- If there was an unrecorded part on the tape when audio dubbing was performed, picture and sound distortion occur at that tape portion during playback.
- If you reset the Tape Counter to zero at the point where you want the audio dubbing to end and turn on the Memory Stop Function **(➜ 170)**, the audio dubbing automatically stops when the tape reaches that point.

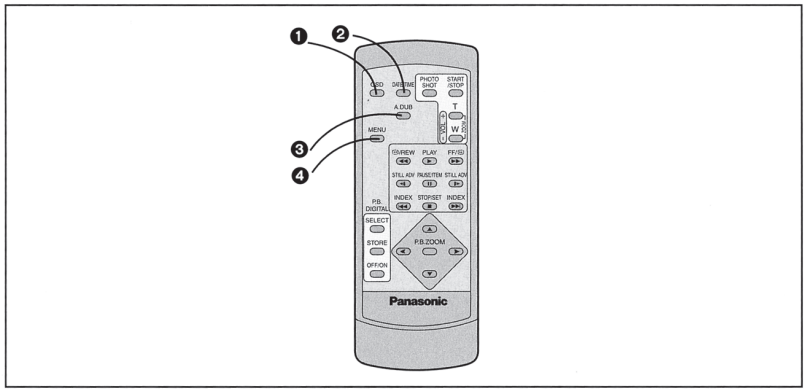

Remote Controller

Using the wireless Remote Controller supplied with the Movie Camera allows operating most of the Movie Camera's major functions from a distance.

Buttons on the Remote Controller

❶ Indication Output Button [OSD]
To display the function and operation indications on a connected TV. **(➜ 52)**

❷ Date and Time Button [DATE/TIME]
To make the Date/Time Indication appear or disappear in the picture during recording or playback. **(➜ 178)**

❸ Audio Dubbing Button [A.DUB]
To perform audio dubbing. **(➜ 100)**

❹ Menu Button [MENU]
To display the menu. **(➜ 130)**
In this case, the functions of the following buttons are changed:

Pause Button → Item Button
To select items on the Menu.

Stop Button→ Setting Button
To set the mode for the selected item.

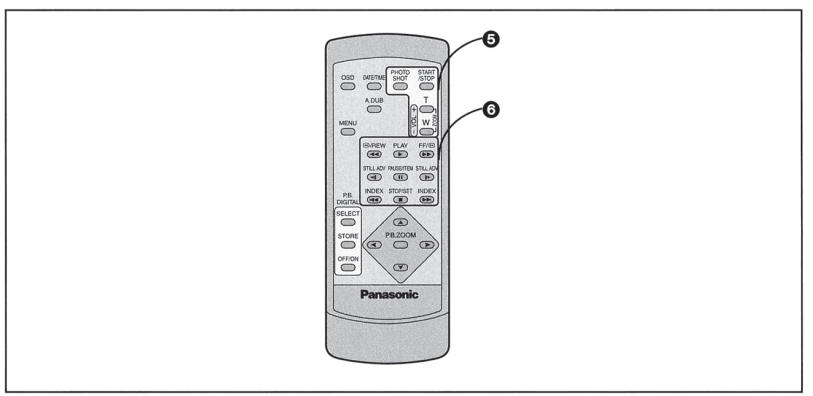

❺ Controls for Recording and Sound Volume

Photoshot Button [PHOTO SHOT]
To record still pictures. **(➜ 38)**

Recording Start/Stop Button [START/STOP]
To start and pause recording. **(➜ 30)**

Zoom/Sound Volume Buttons [ZOOM/VOL]
CAMERA Mode: To zoom in and out. **(➜ 36)**
VCR Mode: To adjust the volume of the playback sound. **(➜ 44)**
To change the zoom magnification of the Playback Zoom. **(➜ 98)**

❻ Controls for Playback and Menu Settings

Rewind/Review Button [◄◄]
To start review playback **(➜ 46)** if pressed during normal playback; and to rewind the tape if pressed in the Stop Mode.
Also to activate the Camera Search Function **(➜ 56)** in reverse direction if kept pressed in the Recording Pause Mode. Pressing it briefly activates the Recording Check Function **(➜ 32)**.

Fast-forward/Cue Button [►►]
To start cue playback **(➜ 46)** if pressed during normal playback; and to fast-forward the tape if pressed in the Stop Mode.
Also to activate the Camera Search Function **(➜ 56)** in forward direction if kept pressed in the Recording Pause Mode.

Play Button [►]
To start playback. **(➜ 44)**

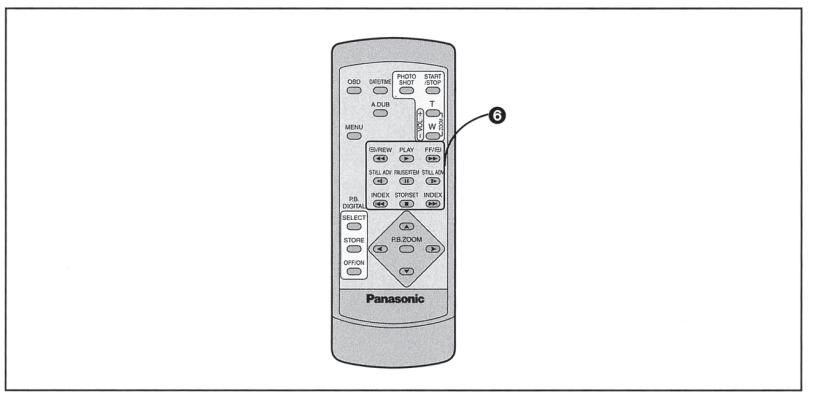

❻ Controls for Playback and Menu Settings (Continued)

Slow Motion/Still Advance Button [◄I, I►]
To perform Slow Motion Playback if pressed in the Normal Playback Mode; and to perform Still Advance Playback if pressed in the Still Playback Mode. **(➜ 48, 50)**
(◄I: in reverse direction, I►: in forward direction)

Index Search Button [I◄◄, ►►I]
To search for recorded scenes marked with an index signal and for still images recorded in the Photoshot Mode. **(➜ 62, 64)**
(I◄◄: in reverse direction, ►►I: in forward direction)

Stop Button [■]
To stop the tape. **(➜ 44)**
Or when the menu is displayed, to set a desired mode or value for the selected item. **(➜ 130)**

Pause Button [❚❚]
To pause playback. **(➜ 50)**
The playback picture stands still. Or when the menu is displayed, to select an item. **(➜ 130)**

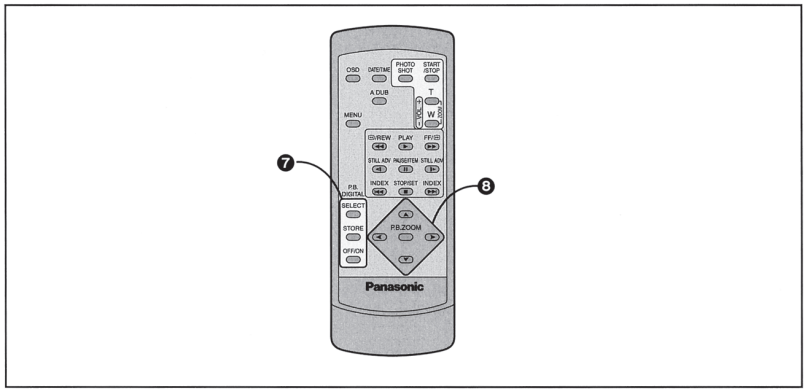

7 Playback Digital Effects

Selection Button [SELECT]
To select the desired digital effect for [EFFECT SELECT] on the [DIGITAL EFFECT] Sub-Menu of the [VCR FUNCTIONS] Main-Menu. **(➜ 94)**

Store Button [STORE]
To store a still picture in memory for the Wipe or Mix Function. **(➜ 96)**

Off/On Button [OFF/ON]
To suspend the selected digital mode or re-activate it. **(➜ 94)**
To start a Wipe or Mix transition from the still picture stored in memory. **(➜ 96)**

8 Playback Zoom Button [P.B.ZOOM]
To enlarge a part of the playback picture. **(➜ 98)**

Upward Direction Button [▲]
Left/Right Direction Button [◀, ▶]
Downward Direction Button [▼]

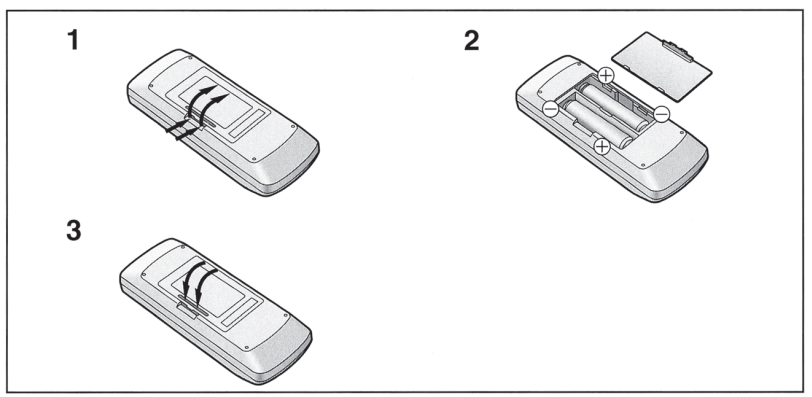

Remote Controller (Continued)

■ Inserting the Batteries into the Remote Controller

1 Remove off the Battery Cover.
2 Insert the batteries with the polarity (⊕ and ⊖) correctly aligned.
3 Replace the Battery Cover.

■ Replacing the Batteries

The life of the batteries is about 1 year.
When the batteries are exhausted, purchase two new "AA", "UM-3" or "R6" type batteries and insert them in the same way as explained above.

- Do not mix old batteries with new batteries.
- Do not mix different battery types, i.e. Alkaline and Manganese.
- Do not use rechargeable (Ni-Cd) batteries.
- Do not short-circuit the batteries.
- When you do not use the remote controller for a long time, take out the batteries and store them in a cool, dry place.

CAUTION
Danger of explosion if batteries are incorrectly replaced. Replace only with the same or equivalent type recommended by the equipment manufacturer. Discard used batteries according to manufacturer's instructions.

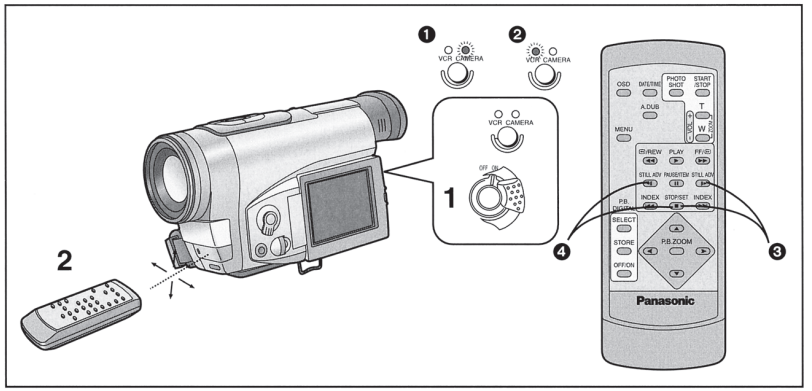

■ Using the Remote Controller

1 Set the [OFF/ON] Switch on the Movie Camera to [ON].
- When the [CAMERA] Lamp lights, you can use the recording functions. ❶
- If you want to use the playback functions, press the [VCR/CAMERA] Button so that the [VCR] Lamp lights. ❷

2 Aim the Remote Controller at the Remote Control Sensor on the Movie Camera and press the appropriate button.
Distance to the Movie Camera: Less than 5 metres.
Angle: Approximately 15° up, down, left and right from centre axis.

- The operative range described above is valid for using the Remote Controller indoors.
  When using it outdoors or under strong lights, it may not work correctly even within the above range.
- Within a distance of about 1 metre, it is also possible to use the Remote Controller from the side (LCD Monitor side).

Selecting the Remote Controller Mode

When using two Movie Cameras at the same time, selecting different Remote Controller Modes makes it possible to operate them separately.
- If the Remote Controller Mode set on the Movie Camera and on its Remote Controller are not matched, the [REMOTE] Indication appears.
- Set [REMOTE] on the Menu to the desired Remote Controller Mode.

Setting to Be Made on the Movie Camera:
Set [REMOTE] on the [OTHER FUNCTIONS] Sub-Menu of the [VCR FUNCTIONS] or [CAMERA FUNCTIONS] Main-Menu to the desired Remote Controller Mode.

Setting to Be Made on the Remote Controller:
[VCR1]: Press the [▶] Button and [■] Button simultaneously. ❸
[VCR2]: Press the [◀] Button and [■] Button simultaneously. ❹
- Replacing the batteries in the Remote Controller automatically resets it to the [VCR1] Mode.

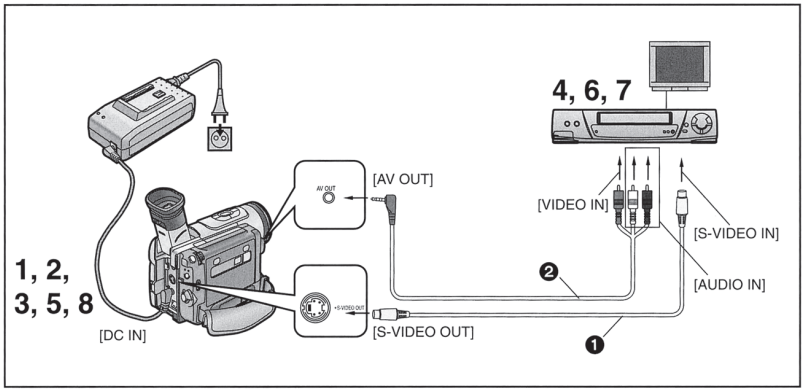

Copying onto an S-VHS (or VHS) Cassette (Dubbing)

You can copy the picture and sound recorded on this Movie Camera onto an S-VHS or VHS cassette in a home video recorder.

After making the connections shown above, perform the necessary operations.

- Before copying, be sure to press the [OSD] Button on the Remote Controller (**➔ 104**) so that no indications are visible. Otherwise, the displayed tape counter and function indications are also copied.

Movie Camera:

1 Set the [OFF/ON] Switch to [ON].

2 Insert the recorded cassette.

3 Press the [VCR/CAMERA] Button so that the [VCR] Lamp lights.

VCR:

4 Insert an unrecorded cassette with intact erasure prevention tab.
As some settings (external input, tape speed, etc.) on the VCR are necessary, please refer to your VCR's operating instructions.

Movie Camera:

5 Press the Play Button [▶] to start playback.

VCR:

6 Start recording.

7 Press the Pause or Stop Button to stop recording.

Movie Camera:

8 Press the Stop Button [■] to stop playback.

❶ S-Video Cable

❷ AV Cable

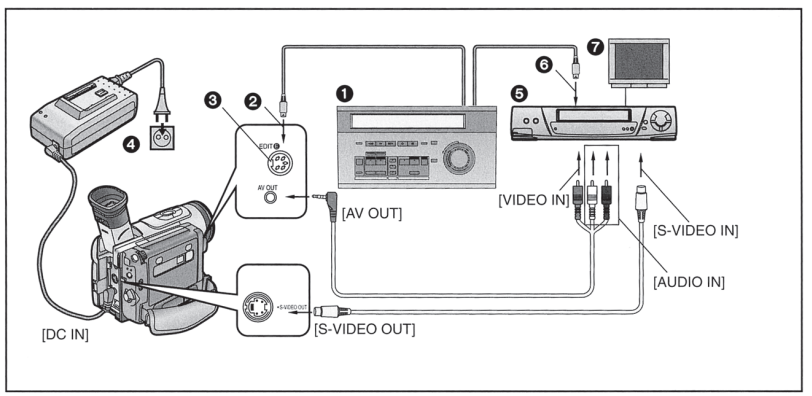

Copying with the Help of an Editing Controller

If you connect the Movie Camera to an Editing Controller equipped with 5-pin Edit Socket, this Movie Camera's playback functions can be controlled from the Editing Controller.

After making the connections shown above, perform the necessary operations.

When you perform editing with the NV-HS1000 VCR (optional) connected to this Movie Camera, first activate the Still Playback Mode on the Movie Camera and then start the actual editing operation.

When Connecting the Editing Controller VW-EC500E ❶ (optional)

- A VCR equipped with 5-pin Edit Socket is necessary.
- When you connect the VW-EC500E to the Movie Camera, an adjustment on the VW-EC500E is necessary. For the operation of the Editing Controller, refer to its operating instructions.

When Editing with Time Code

Set [DISPLAY] on the [DISPLAY SETUP] Sub-Menu of the [VCR FUNCTIONS] Main-Menu to [TIMECODE] to make the Time Code appear.

- When the Time Code is displayed, the Time Code Signal is output from the Edit Socket.
- When the Counter Indication is displayed, the Linear Tape Counter Signal is output.

❷ To Edit Socket

❸ Edit Socket

❹ Connect the AC Adaptor.

❺ VCR (not supplied)

❻ To Edit Socket

❼ TV (not supplied)

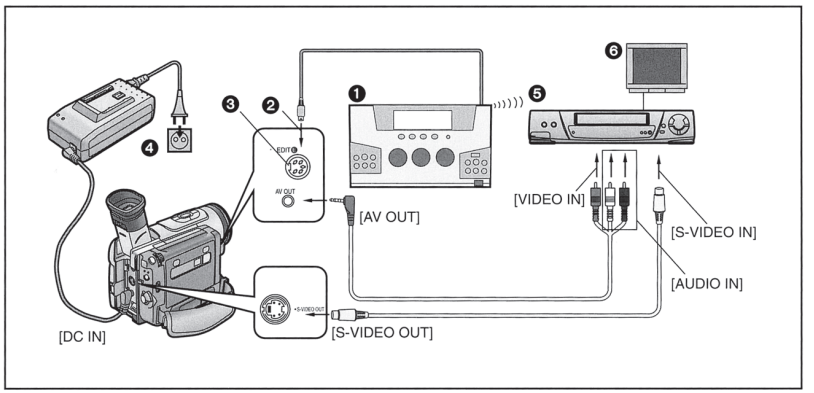

When Connecting the Editing Controller VW-EC1E (optional)

- When you use the Editing Controller VW-EC1E ❶, it is not necessary to connect it to the Edit Socket on the VCR, as the VCR's operation is performed via infrared remote control. Therefore, editing is also possible onto VCRs not equipped with an Edit Socket.
- For the operation of the Editing Controller, refer to its operating instructions.

❷ To Edit Socket

❸ Edit Socket

❹ Connect the AC Adaptor.

❺ VCR (not supplied)

❻ TV (not supplied)

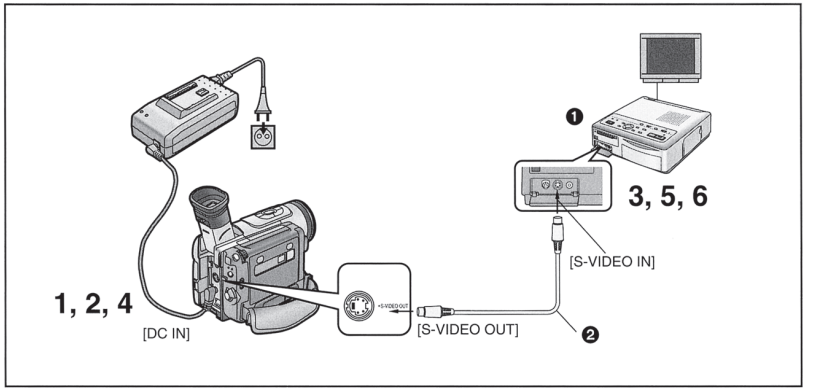

Using the Movie Camera with a Video Printer

If you connect the Movie Camera to a Video Printer ❶, you can print still pictures from scenes recorded with the Movie Camera.
After making the connections shown above, perform the necessary operations.

Movie Camera:

1 Set the [OFF/ON] Switch to [ON] to turn the Movie Camera on.

2 Insert a recorded cassette and press the [VCR/CAMERA] Button so that the [VCR] Lamp lights.

Video Printer:

3 Turn the Video Printer on.

Movie Camera:

4 Press the Play Button [▶].

Video Printer:

5 Store the image in memory.

6 Start printing.

For details about the operation of the Video Printer, read its operating instructions.

❷ S-Video Cable

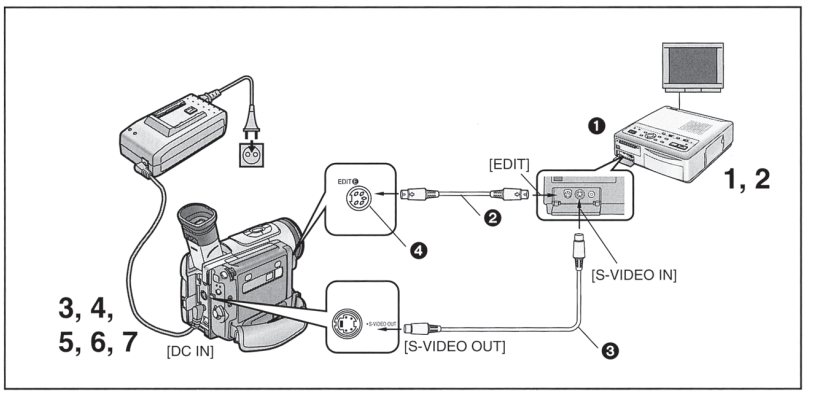

Using the Automatic Printing Function (Autoprint)

If you connect the Movie Camera to a Video Printer ❶ equipped with 5-pin Edit Socket, you can use the Autoprint Function to automatically print all still pictures recorded in the Photoshot Mode.
After making the connections shown above, perform the necessary operations.

Video Printer:

1 Turn the Video Printer on.

2 Make the necessary settings on the Video Printer according to the input signal.

Movie Camera:

3 Set the [OFF/ON] Switch to [ON] to turn the Movie Camera on.

4 Press the [VCR/CAMERA] Button so that the [VCR] Lamp lights.

5 Search for the first still picture from which you want to start printing with the Autoprint Function.
If you want to print all still pictures recorded on the cassette, rewind the tape to its beginning.

6 Press the [MENU] Button.

7 Set [AUTO PRINT] on the [OTHER FUNCTIONS] Sub-Menu to [ON].
Automatic printing starts.

- If you want to stop the automatic printing in the middle, press the Stop Button [■] on the Movie Camera.

❷ Edit Cable VW-K5E (optional)

❸ S-Video Cable

❹ Edit Socket

- When the cooling function of the Video Printer is activated and the printing speed slows down, automatic printing may stop. In this case, set [AUTO PRINT] on the [OTHER FUNCTIONS] Sub-Menu on the [VCR FUNCTIONS] Main-Menu to [ON] again.
- If you replace the ink cassette or paper during printing, the same picture may be printed twice.
- Before storing an image in memory on the Video Printer, press the [OSD] Button **(➔ 104)** on the Remote Controller of the Movie Camera so that no indications appear in the picture. Otherwise, the Counter Indication and other function indications are also printed in the picture.
- The [PRINTER ERROR] Indication appears if the Movie Camera is not correctly connected to the Video Printer or when the ink cassette and/or the paper in the Video Printer are not loaded or used up.

- As index signals are not recorded with the still pictures recorded in the Continuous Photoshot Mode, automatic printing of these pictures is not possible.
- If still pictures are recorded successively in the Photoshot Mode, some pictures may be skipped during printing.
- In the following cases, some pictures may be skipped when printing with the Autoprint Function.
  - When you print still pictures recorded in the Photoshot Mode on a video camera of another brand.
  - If you turn the Movie Camera on and off several times (3 times or more) between recording two still pictures in the Photoshot Mode.
  - When you record a still picture in the Photoshot Mode on the same part of a cassette where a Photoshot picture was recorded before.
  - When you select a different recording speed (SP/LP) between the recording of two still pictures in the Photoshot Mode.
  - At the first Photoshot picture to be printed.
- A picture that is recorded very close to the beginning of the tape may not be printed.

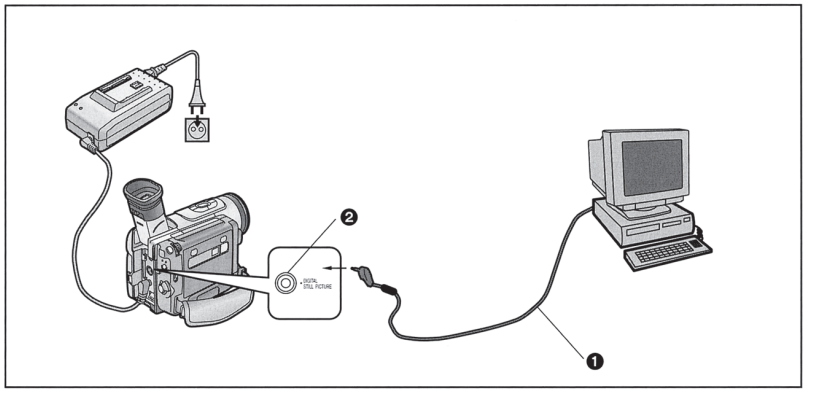

Using the Movie Camera with a Computer

The Personal Computer Connection Kit VW-DTA1E (optional), or VW-DTA5E (optional) for Digital Video Cameras makes it possible to connect the Movie Camera to a computer and transmit still video images to it.

Computer System Requirements

DV STUDIO can be installed in a PC/AT personal computer which can run Microsoft® Windows® 95.

Compatible machines:	Personal computer with 80486DX4 or higher CPU (Pentium™ or higher recommended)
Graphic card:	True Color (approx. 16.7 million colours) recommended (operation also possible even with 256 colours)
Installed memory:	16 MB or more (32 MB or more recommended)
Free hard disk space:	At least 10 MB
Disk drive:	CD-ROM drive
Serial port:	RS-232C (D-sub 9pin)
Other requirements:	Mouse

To connect the Movie Camera to the computer, use the special Interface Adaptor ❶ contained in the Personal Computer Connection Kit.

- When using the Personal Computer Connection Kit, make sure that the Movie Camera is set to the VCR Mode.
- Pictures that you intend to import into computer applications should be recorded in the SP Mode.
- When recording, take care that the Time Code is uninterrupted from the beginning of the tape.
- Windows® 95 is a trademark of Microsoft Corporation U.S.A.
- All other company and product names in the operating instructions are trademarks of their respective corporations.

❷ Digital Still Picture Terminal

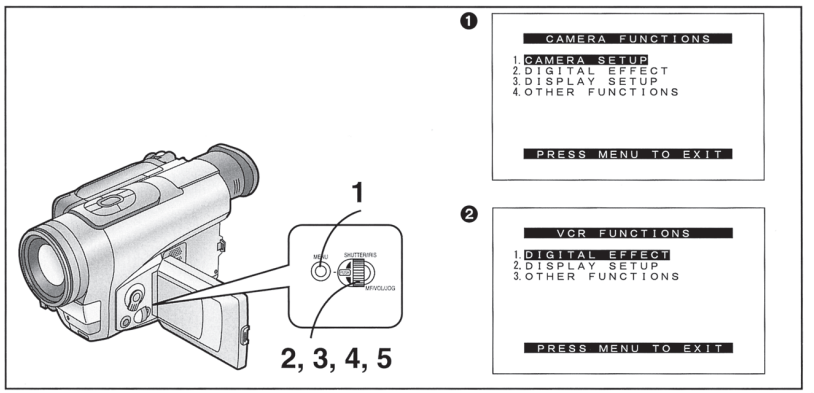

Using the Menu Screen

This Movie Camera displays the settings of various functions in Menus to make it easy to select the desired functions and settings.

1 Press the [MENU] Button.
When you press this button while the [CAMERA] Lamp is lit, the Camera Mode Menu ❶ appears.
When you press this button while the [VCR] Lamp is lit, the VCR Mode Menu ❷ appears.

2 Turn the [PUSH] Dial to select the desired sub-menu.
Turning the [PUSH] Dial changes the highlighted item.

3 Press the [PUSH] Dial to display the selected sub-menu.

4 Turn the [PUSH] Dial to select the item to be set.

5 Press the [PUSH] Dial to set the selected item to the desired mode.
Every press moves the cursor [▶] to the next mode.
Settings for the menu item(s) that cannot be used due to the combination of the selected functions are displayed in dark blue.

- While the Menu is displayed, recording or playback is not possible. During playback, displaying menu is possible, but not during recording.
- You can also perform the above operations by using the Remote Controller. **(➜ 104)**

Exiting the Menu

Press the [MENU] Button again.

Note About the Settings Made on the Menu

The settings you selected on the Menu are maintained when you turn the Movie Camera off. However, if you disconnect the power supply unit (Battery or AC Adaptor) from the Movie Camera before turning it off, the selected settings may not be maintained.

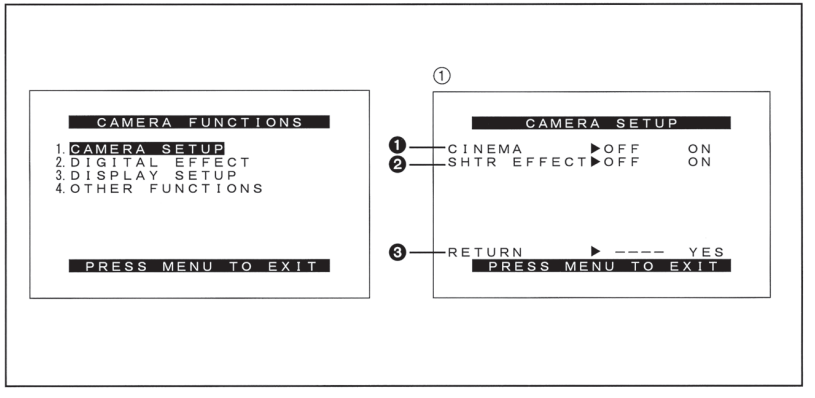

Menu Functions

The illustrations of the menus are intended for explaining the functions; the actual menus look somewhat different.

Camera Mode Main-Menu [CAMERA FUNCTIONS]

1. **CAMERA SETUP**
2. **DIGITAL EFFECT**
3. **DISPLAY SETUP**
4. **OTHER FUNCTIONS**

[CAMERA SETUP] Sub-Menu ①

❶ **Cinema-like Format Recording [CINEMA] (➜ 40)**

❷ **Shutter Effect [SHTR EFFECT] (➜ 38)**

❸ **Returning to the Camera Mode Main-Menu [RETURN]**
If you set [RETURN] to [YES], the menu changes back to the [CAMERA FUNCTIONS] Main-Menu.

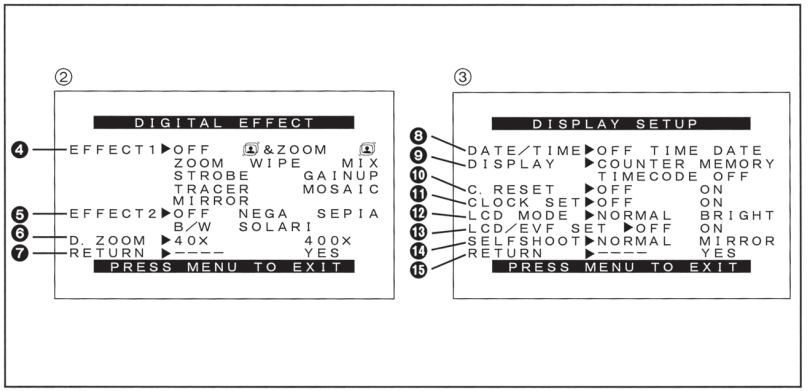

Camera Mode Main-Menu
[CAMERA FUNCTIONS] (Continued)

[DIGITAL EFFECT] Sub-Menu ②

4 Digital Effects 1 [EFFECT1] (➜ 36, 42, 72)

5 Digital Effects 2 [EFFECT2] (➜ 74)

6 Digital Zoom [D.ZOOM] (➜ 36)

7 Returning to the Camera Mode Main-Menu [RETURN]

[DISPLAY SETUP] Sub-Menu ③

8 Date and Time Indication [DATE/TIME] (➜ 178)

9 Counter Display Mode [DISPLAY] (➜ 178)

10 Counter Reset [C.RESET] (➜ 170)
To reset the counter to zero.
However, the Time Code cannot be reset.

11 Date and Time Setting [CLOCK SET] (➜ 140)

12 LCD Lighting Mode [LCD MODE] (➜ 144)

13 LCD and Finder Adjustment [LCD/EVF SET] (➜ 144)

14 Self-Recording [SELFSHOOT] (➜ 34)

15 Returning to the Camera Mode Main-Menu [RETURN]

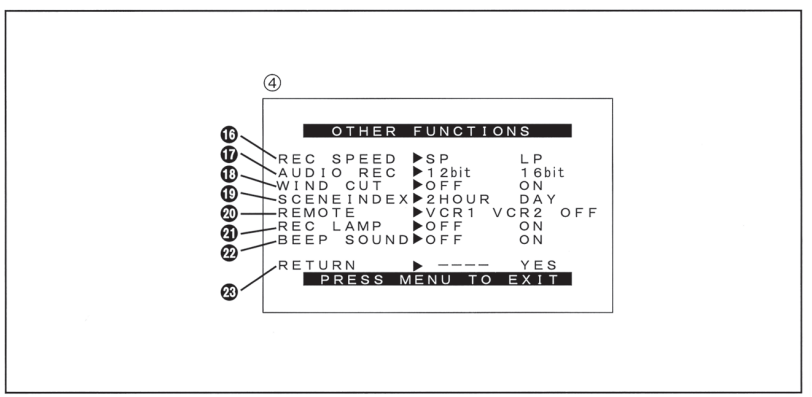

Camera Mode Main-Menu
[CAMERA FUNCTIONS] (Continued)

[OTHER FUNCTIONS] Sub-Menu ④

16 Recording Speed Mode [REC SPEED] (➜ 24)

17 Audio Recording Mode [AUDIO REC] (➜ 100)

18 Wind Noise Reduction [WIND CUT]
If you set [WIND CUT] to [ON], the noise of the wind hitting the microphone is reduced. However, this also causes a slight deterioration of the sound reproduction in the bass range.

19 Scene Index Mode [SCENEINDEX] (➜ 64)

20 Remote Controller Mode [REMOTE] (➜ 114)

21 Recording Lamp [REC LAMP] (➜ 30)

22 Beep Sound [BEEP SOUND]
If you set [BEEP SOUND] to [ON], a confirmation/alarm beep sound is emitted in the following cases:
1 Beep
- When you start recording
- When you switch the [OFF/ON] Switch from [OFF] to [ON]

2 Beeps
- When you pause recording

10 Beeps
- When you operate the Movie Camera in an inappropriate way before or during recording

23 Returning to the Camera Mode Main-Menu [RETURN]

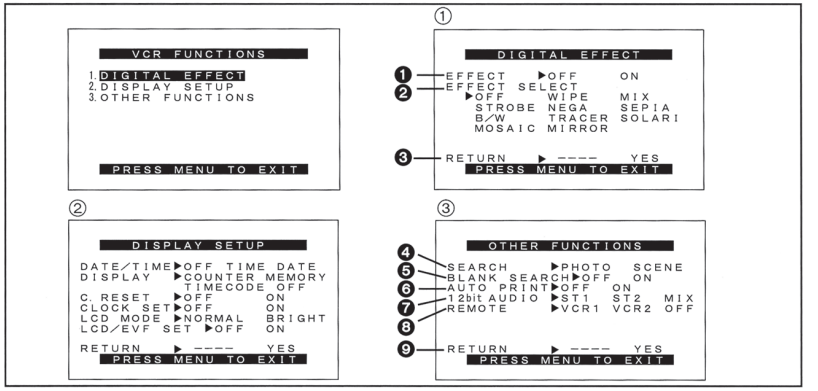

VCR Mode Main-Menu [VCR FUNCTIONS]

1. **DIGITAL EFFECT**
2. **DISPLAY SETUP**
3. **OTHER FUNCTIONS**

[DIGITAL EFFECT] Sub-Menu ①

1 Digital Effect On/Off [EFFECT] (➜ 94)

2 Digital Effect Selection [EFFECT SELECT] (➜ 94)

3 Returning to the VCR Mode Main-Menu [RETURN]
If you set [RETURN] to [YES], the Menu changes back to the [VCR FUNCTIONS] Main-Menu.

[DISPLAY SETUP] Sub-Menu ②
All items on the [DISPLAY SETUP] Sub-Menu are the same as those on the [DISPLAY SETUP] Sub-Menu of the [CAMERA FUNCTIONS] Main-Menu.

[OTHER FUNCTIONS] Sub-Menu ③

4 Index Search Mode [SEARCH] (➜ 60, 62, 64)

5 Blank Search [BLANK SEARCH] (➜ 58)

6 Automatic Printing [AUTO PRINT] (➜ 124)

7 Audio Output Mode [12bit AUDIO] (➜ 102)

8 Remote Controller Mode [REMOTE] (➜ 114)

9 Returning to the VCR Mode Main-Menu [RETURN]

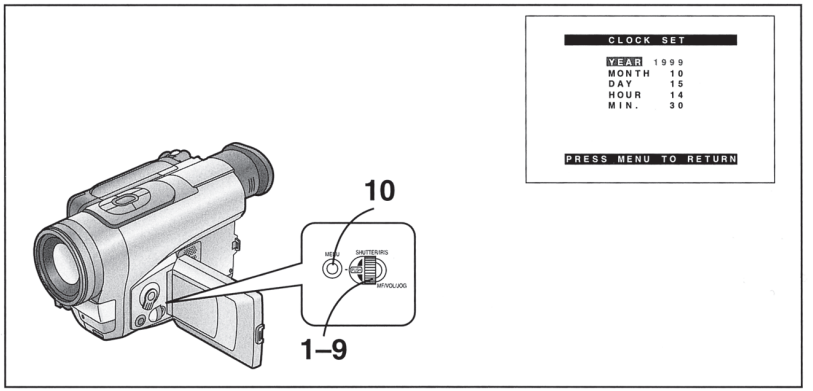

Setting the Date and Time

If you set [CLOCK SET] on the [DISPLAY SETUP] Sub-Menu of the [VCR FUNCTIONS] or the [CAMERA FUNCTIONS] Main-Menu to [ON], the menu shown above appears.

For example: To set the clock to 15th October 1999, 14:30.

1 Turn the [PUSH] Dial to set to [1999].
The years change in the following order:
1990→1991→...→2089→1990→...

2 Press the [PUSH] Dial to select [MONTH].

3 Turn the [PUSH] Dial to set to [10].

4 Press the [PUSH] Dial to select [DAY].

5 Turn the [PUSH] Dial to set to [15].

6 Press the [PUSH] Dial to select [HOUR].

7 Turn the [PUSH] Dial to set to [14].

8 Press the [PUSH] Dial to select [MIN.].

9 Turn the [PUSH] Dial to set to [30].

10 Press the [MENU] Button to finish the date and time setting.
The operation of the clock starts from [00] seconds.
Pressing the button one more time makes the menu disappear.

- As the time of the Movie Camera's built-in clock is subject to a slight imprecision, be sure to check the time before recording. If the flashing [⊠] Indication appears, charge the built-in battery **(➔ 142)** and set the date and time again.
- The clock employs the 24-hour system.

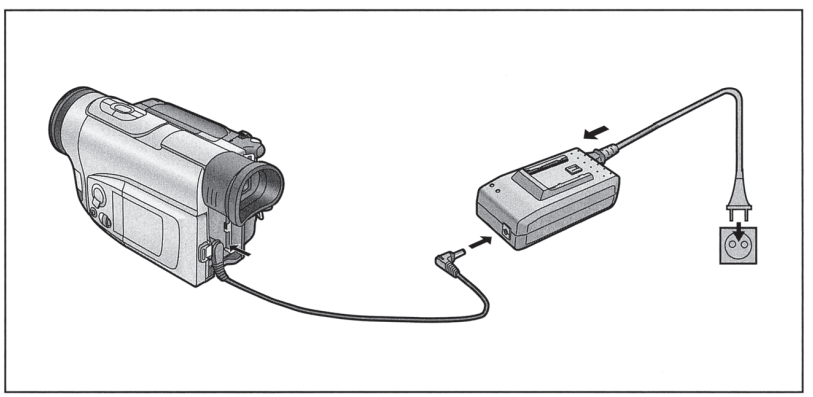

Charging the Built-in Lithium Battery

The built-in battery maintains the operation of the clock. When the [⊠] Indication appears, the built-in lithium battery is discharged. Charge the discharged battery in the following way and after charging is finished, set the date and time.

1 Connect the AC Adaptor to the Movie Camera and to an AC mains socket.
(➔ 16)

2 Leave the Movie Camera turned off.

3 Leave the Movie Camera in this condition for approximately 4 hours.
After charging for 4 hours, the built-in lithium battery can power the clock for approximately 3 months.

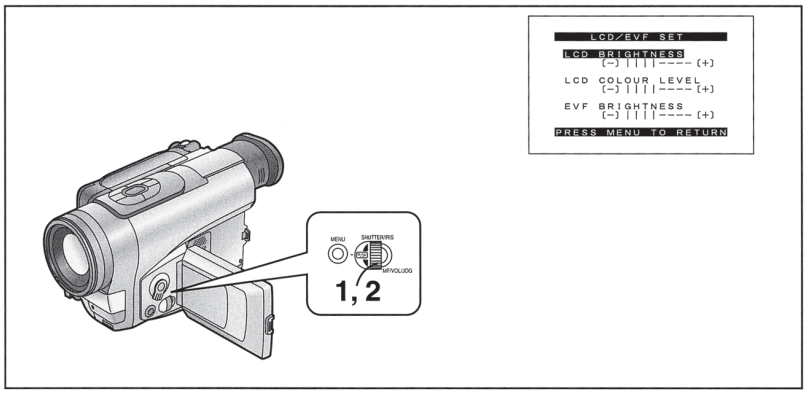

Adjusting the Brightness and Colour Level of the LCD Monitor/ Finder

If you set [LCD/EVF SET] on the [DISPLAY SETUP] Sub-Menu of the [VCR FUNCTIONS] or the [CAMERA FUNCTIONS] Main-Menu to [ON], the following items are displayed.

LCD Brightness [LCD BRIGHTNESS]
To adjust the brightness of the picture on the LCD screen.

LCD Colour Level [LCD COLOUR LEVEL]
To adjust the colour saturation of the picture on the LCD screen.

Finder Brightness [EVF BRIGHTNESS]
To adjust the brightness of the picture in the Finder.

1 Press the [PUSH] Dial to select the item that you want to adjust.

2 Turn the [PUSH] Dial to increase or decrease the vertical bars of the Bar Indication.
The Bar Indication is divided into 8 steps. The more vertical bars are shown, the stronger is the brightness or colour saturation.

If you use the Remote Controller for these adjustments, press the [ITEM] Button to select the item, and then press the [SET] Button to adjust it. Keeping the [SET] Button pressed changes the number of bars.

Increasing the Brightness of the Whole LCD Monitor Screen
Set [LCD MODE] on the [DISPLAY SETUP] Sub-Menu of the [VCR FUNCTIONS] or the [CAMERA FUNCTIONS] Main-Menu to [BRIGHT].

- These adjustments have no influence on the actually recorded picture.

Cautions for Use

Take care that no water enters the Movie Camera when using it in the rain and snow or on the beach.

- The Movie Camera and the cassette could become damaged. (It might not be repairable.)
- If seawater has accidentally splashed on the Movie Camera, moisten a soft cloth with tap water, wring it well and wipe the camera body carefully with it. Then thoroughly wipe it with a soft, dry cloth.

Keep the Movie Camera away from magnetized equipment (TVs, video games, etc.)

- If you use the Movie Camera on or near a TV, the electromagnetic radiation may cause picture and sound distortion.
- Strong magnetic fields generated by speakers and large motors may damage the recordings on the tape and distort the picture.
- The electromagnetic radiation from micro-processors can adversely influence the Movie Camera and cause picture and sound distortion.
- If the Movie Camera is adversely influenced by magnetized equipment and does not work correctly, turn the Movie Camera off, remove the Battery or disconnect the AC Adaptor and attach the Battery or connect the AC Adaptor again. Then turn the Movie Camera on.

Do not use the Movie Camera near a radio transmitter or high-voltage power line.

- If you record near a radio transmitter or high-voltage power line, the recorded picture and sound may be adversely influenced.

Do not use the Movie Camera for surveillance and other industrial applications.

- If the Movie Camera is being used for a long time, the inside temperature could rise excessively and this may cause malfunction.
- This Movie Camera is not designed for industrial use.

Take care that no sand and fine dust enters the Movie Camera when using it on a beach or similar places.

- Sand and dust could damage the Movie Camera and cassette. (Be careful when inserting and removing the cassette.)

Do not spray insecticide or volatile agents on the Movie Camera.

- Such agents could deform the body and cause the surface coating to peel off.
- Do not leave the Movie Camera in direct contact with rubber or plastic products for a long time.

Do not use benzine or thinner for cleaning.

- They could deform the body and cause the surface coating to peel off.
- Before cleaning, remove the Battery or unplug the AC Mains Lead from the AC mains socket.
- Wipe the Movie Camera with a soft, clean cloth. To remove persistent stains, wipe with a cloth moistened with mild detergent diluted with water, and then finish with a dry cloth.

After use, always take out the cassette and remove the Battery or unplug the AC Mains Lead from the AC mains socket.

- If you leave the cassette in the Movie Camera, the tape can become loosened and damaged.
- If you leave the Battery attached to the Movie Camera for a long time, the voltage level may drop excessively so that the Battery cannot be used any more even after charging.

Notes about the AC Adaptor

- When you attach the Battery to the AC Adaptor, the [CHARGE] Lamp flashes for a few seconds while the Battery condition is being checked. Charging then starts and the [CHARGE] Lamp remains lit.
- If the temperature of the Battery is extremely high or extremely low, or if the Battery is excessively discharged because of long storage, the [CHARGE] Lamp may flash for some time and charging will then start automatically. However, if the [CHARGE] Lamp continues to flash after the Battery has cooled down or warmed up sufficiently, some malfunction may have occurred in the Battery or in the AC Adaptor. In this case, consult with your dealer.
- When the Battery is warm, charging takes longer than usual.
- When you use the AC Adaptor near a radio, the radio reception may be distorted. Keep the AC Adaptor more than 1 metre away from the radio.
- When the AC Adaptor is in use, it may emit a whirring sound. However, this is normal.
- After use, be sure to disconnect the AC Mains Lead from the AC mains socket. (If you leave it connected, a small amount of electricity is consumed.)
- Always keep the terminals of the AC Adaptor and the Battery clean.

■ Condensation

Determining Whether Condensation Has Formed Inside and Remedy for Condensation

If the Condensation Indication flashes after you turn on the Movie Camera, condensation has formed inside the Movie Camera. In this case, the Movie Camera automatically switches off after approximately 1 minute. Remedy as follows:

1 Take out the cassette.

All other functions do not work. Depending on the amount of condensation, it may not be possible to take out the cassette. In this case, wait 2–3 hours before taking out the cassette.

2 Leave the Cassette Compartment open and wait for 2–3 hours.

The required time depends on the amount of condensation and the ambient temperature.

3 After 2–3 hours, turn the Movie Camera on and check if the Condensation Indication is displayed.

Even if the Condensation Indication is no longer displayed, wait 1 more hour for added safety before using the Movie Camera again.

Pay Attention to Condensation Even Before the Condensation Indication Appears.

- As condensation forms gradually, the Condensation Indication may not appear for the first 10–15 minutes after condensation has formed inside.
- In an extremely cold place, the condensation could freeze and turn into frost. In such a case, it takes an additional 2–3 hours for the frost to first melt into condensation and then to be dissolved.

Remedy for a Fogged-up Lens

Set the [OFF/ON] Switch to [OFF] and leave the Movie Camera in this condition for about 1 hour. When the lens has reached about the same temperature as its surroundings, it automatically clears up.

■ Video Head Clogging and Remedy

When the video heads (which contact the tape) are dirty, the playback picture contains mosaic-like patterns or the whole screen becomes black. If they become even more dirty, the recording performance deteriorates and in the worst case, recording may not be possible at all.

Causes of Dirty Video Heads

- A lot of dust in the air
- High-temperature and high-humidity environment
- Damaged tape
- Long-time use

Using the Mini-DV Format Digital Video Head Cleaner (not supplied)

1 Insert the Head Cleaner into the Movie Camera in the same way as a video cassette.
2 Press the Play Button [▶], and after approximately 20 seconds press the Stop Button [■]. (Do not rewind the tape.)
3 Take out the Head Cleaner. Insert a video cassette, perform recording and then play it back to check the picture.
4 If the picture is still not clear, repeat above operation steps 1 - 3. (Do not use the Head Cleaner more than 3 times in succession.)

Notes:

- Do not rewind the tape in the Head Cleaner after every use. Rewind it only after the tape has reached its end, and then use it again in the same way from the beginning.
- If the video heads again become clogged with dirt soon after cleaning, this might be caused by a damaged tape. In this case, stop using that cassette immediately.
- Be careful not to clean the video heads too much. (Too much cleaning could cause excessive wear to the video heads. If the video heads get worn, the picture is not played back clearly even after cleaning.)
- If using the Head Cleaner does not clear the video head clogging, the Movie Camera requires cleaning or repairing by a service centre. Please consult with your dealer.
- This Video Head Cleaner is available from service centres.
- Video head cleaning due to clogging is not a malfunction of the product and is not covered by your warranty.

Periodic Inspection

To ensure optimum picture quality, we recommend that you have worn-out parts such as video heads replaced after approximately 1000 hours of use. (However, this depends considerably on the conditions of use such as temperature, humidity and dust.)

■ Optimum Use of the Battery

Special Characteristics of the Battery

This Battery is a rechargeable lithium-ion battery. Its ability to generate electric energy is based on an internal chemical reaction. This reaction is easily influenced by ambient temperature and humidity, and the useful operation time that the Battery can provide becomes shorter at high and low temperatures. When used in extremely cold surroundings, the Battery may only be able to provide approximately 5 minutes of operation time. If the Battery becomes extremely hot, a protection function is activated and prevents the use of the Battery for some time.

After Use, Always Remove the Battery.

Be sure to remove the Battery from the Movie Camera. (If it is attached to the Movie Camera, a small amount of electric current is consumed even if the Movie Camera is turned off.) Leaving the Battery attached to the Movie Camera for a very long time could cause it to become excessively discharged, so that it cannot be used any more even after charging.

Discarding a Battery That Has Become Unusable

- The usable life of the Battery is limited.
- Do not throw the Battery in a fire because it could explode.

Keep the Battery's Terminals Clean.

Be careful that the terminals do not get plugged up with dust, dirt or other substances.
If you accidentally drop the Battery, confirm that the Battery itself and the terminals are not deformed. Attaching a deformed Battery to the Movie Camera or to the AC Adaptor could damage the Movie Camera or the AC Adaptor.

■ Precautions for Storage

Before Storing the Movie Camera, Take out the Cassette and Remove the Battery.

Store all equipment in a dry place where the temperature remains relatively constant.
(Recommended temperature is 15°C–25°C and recommended relative humidity is 40%–60%.)

Movie Camera

- Wrap it with a soft cloth to prevent dust from entering.

Battery

- Extremely low or high temperature shortens the Battery life.
- Storing it in places with oily smoke and a lot of dust could cause the terminals to get rusty, and this can result in malfunction.
- **Do not allow metal objects (such as necklaces and hair pins) to touch the battery terminals. Short-circuiting may occur and generate heat, and touching it in this condition could inflict serious burns.**
- Store the Battery in discharged condition. If you store the Battery for a long time, we recommend that you charge it once a year and completely use up the charge before storing it again in discharged condition.

Cassette

- Rewind the tape to its beginning before storing. Leaving the cassette with the tape stopped halfway for more than 6 months (depending on the storing condition) loosens the tape. Be sure to rewind it to the beginning.
- Put the cassette in its case to store it. Dust, direct sunlight (ultraviolet rays) and humidity could damage the tape. Dust contains hard mineral particles and cassettes with dust damage the video heads and other parts of the Movie Camera. Make it a habit to always put the cassette back into its case.
- Completely wind the tape forward and then rewind it once every half year. Leaving the cassette for more than a year without winding/rewinding it may deform the cassette because of stretching and shrinking of the tape due to changes in temperature and humidity. Also, the tape may stick together.
- Do not place the cassette near strongly magnetized objects or equipment.
- The tape surface is coated with microscopic magnetic particles and they record signals. Such objects as magnetic necklaces and toys have stronger magnetic force than commonly thought, and this could erase the recorded contents and cause noise in picture and sound.

■ LCD Monitor/Finder/Lens Hood

LCD Monitor

- In places where big changes in temperature occur, condensation may form on the LCD Monitor. Wipe it with a soft, dry cloth.
- When the Movie Camera is very cold when it is turned on, the picture on the LCD Monitor is initially a little darker than normally. However, as the internal temperature rises, the LCD Monitor regains its normal brightness.
- Extremely high precision technology is employed to produce the LCD Monitor screen featuring a total of approximately 122,000 pixels. The result is more than 99.99% effective pixels with a mere 0.01% of the pixels inactive or always lit. However, this is not a malfunction and does not affect the recorded picture.

Finder

- Extremely high precision technology is employed to produce the Finder screen featuring a total of approximately 113,000 pixels. The result is more than 99.99% active pixels, with a mere 0.01% of the pixels inactive or always lit. However, this is not a malfunction and does not affect the recorded picture.
- Do not leave the Finder or the Lens aimed at the sun. This could seriously damage internal parts.
- If you use a large-capacity Battery (CGP-D320; optional) attached to the Movie Camera, viewing the picture in the Finder from behind may not be practical. In this case, turn up the Finder to an angle that allows comfortable viewing.

Lens Hood

- When you want to attach the Tele Conversion Lens (VW-LT4314WE, optional), the Wide Conversion Lens (VW-LW4307WE, optional) or a filter of the Filter Kit (VW-LF43WE, optional), be sure to first remove the Lens Hood by turning it counterclockwise. If you attach a filter of the Filter Kit, you can attach the Lens Hood onto it.
- During recording with a filter or conversions lens attached, the four corners of the picture may become dark (vignetting effect), when you push the [W/T] Zoom Lever toward [W]. For details, please also read the operating instructions of the accessory being used.

■ Repeat Playback

- If you keep the Playback Button [▶] pressed for more than 5 seconds, the Movie Camera switches over to the Repeat Playback Mode and the [R ▷] Indication appears. (To cancel the Repeat Playback Mode, set the [OFF/ON] Switch to [OFF].)

■ Listening to the Playback Sound via Headphones

If you want to use headphones to listen to the playback sound, connect them to the Headphone Conversion Adaptor (VW-CH1E, optional) and then connect it to the [AV OUT] Socket on the Movie Camera. In this case, no sound (including beep and shutter click sounds) is reproduced from the Movie Camera's built-in speaker, and the volume of the playback sound cannot be adjusted.

■ Digital Video System

In the digital video system, picture and sound are converted into digital signals and recorded onto the tape.
This completely digital recording allows recording and playback of picture and sound with minimum quality deterioration.
In addition, such data as Time Code, Date and Time are also automatically recorded as digital signals.

Features

- Superior picture resolution
- Excellent signal-to-noise ratio
- Stable pictures
- Minimised quality deterioration in dubbing
- Minimised cross colour distortion
- PCM digital sound
- No picture deterioration in LP Mode
- 6.35 mm-wide tape
- Compact cassette with long recording time
- Minimised quality deterioration in editing
- Time Code editing

Compatibility with S-VHS or VHS Cassettes

As this Movie Camera uses a digital method for recording picture and sound, there is no compatibility with conventional S-VHS or VHS video equipment using analog recording methods.
In addition, the size and shape of the cassette are completely different.

Compatibility with Output Signals

As the video and audio signals output from the audio and video output sockets are analog—the same as in conventional video systems—you can connect this Movie Camera to your S-VHS or VHS VCR or TV for playback.

PCM Digital Sound

For recording of the sound, this Movie Camera offers the choice between two different PCM Audio Recording Modes.

- 16 bit, 48 kHz, 2 channels
- 12 bit, 32 kHz, 4 channels

The "16 bit, 48 kHz, 2 channels" Mode offers superior recording sound quality.
The "12 bit, 32 kHz, 4 channels" Mode lets you record the original sound in stereo on two channels and the dubbed sound in stereo on two separate channels.

Sub Code

The digital recording system offers the added capability of recording sub code containing various data.
The following data is recorded as sub code on this Movie Camera:

- Time code
- Recording date and time
- Index signals for locating still images recorded in the Photoshot Mode
- Index signals for locating the beginning of scenes marked with index signal

■ Focus

If you look at an object through a magnifying glass and move it closer or further away from your eye, you will reach a point where the object becomes clearly visible. Being focused or in focus means that the subject can be seen with optimum clarity and sharpness.

Human Eyes

Human eyes have lenses as well, and when we look at objects at different distances, the shape of these lenses changes automatically so that we can always see these objects clearly.

Movie Camera

The image of the subject enters the Movie Camera through the lens and is converted into an electric signal (video signal) for recording onto magnetic tape. The focus is adjusted either manually or automatically by moving a focusing lens.

Auto Focus Adjustment

The Auto Focus System automatically moves the internal focusing lens forward or backward and adjusts the focus so that the subject can be seen clearly.
The Auto Focus Adjustment has the following characteristics:

- It adjusts until the vertical contours of the subject are as sharp and clean as possible.
- It adjusts the focus on the subjects with strong contrast.
- It adjusts the focus on the subject in the centre of the LCD Monitor or Finder.
  Unlike human eyes, the lens of the Movie Camera cannot instantaneously change the focus from a nearby to a distant subject and vice versa.

For the following subjects and recording situations, the Auto Focus System cannot provide precise adjustment.
Use the Manual Focus Mode instead. (➜ 88)

❶ **Recording subjects with a part of it near the Movie Camera and another part far away from it**
As the Auto Focus adjusts on the centre part of the image, it is often impossible to bring the nearby and distant parts of the subject into focus.
When you want to record a person with a distant mountain in the back, it is not possible to focus on both.

❷ **Recording subjects behind glass covered with dirt or dust**
As the focus is adjusted on the dirty glass, the subject behind the glass is out of focus. When recording a subject across a street on which cars are running, the focus may be adjusted on the cars.

❸ **Recording subjects in dark surroundings**
As the amount of light information entering through the lens is greatly reduced, the Movie Camera cannot adjust the focus precisely.

❹ **Recording subjects surrounded by objects with shiny surfaces or much light reflection**
As the Movie Camera adjusts the focus on objects with shiny surfaces or much light reflection, the subject may go out of focus.
Therefore, when recording at a lake or the sea, evening scenes, fireworks, or under special types of lighting, the subject may be out of focus.

❺ **Recording fast-moving subjects**
As the internal focusing lens is moved mechanically, it cannot follow fast-moving subjects without delay. Therefore, subjects like children running back and forth may temporarily go out of focus.

❻ **Subjects with weak contrast**
As the Movie Camera adjusts the focus based on vertical contours in the picture, subjects with little contrast such as a white wall may be out of focus.

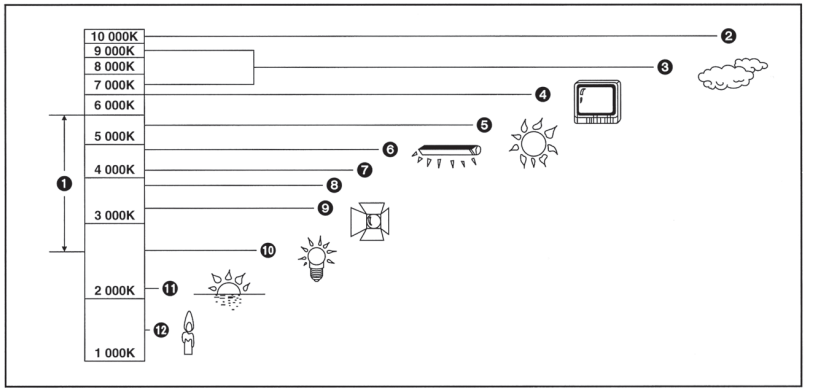

■ Colour Temperature

Every light source has its own colour temperature measured in Kelvin (K). The higher the Kelvin value, the more bluish the light; the lower the value, the more reddish the light. The Kelvin value is related to the tint of the light, but not directly to its brightness.
The range ❶ indicated in the illustration above shows the light sources for which this Movie Camera can provide precise white balance adjustment and, therefore, natural colours in the recorded pictures, when using the Full Auto Mode. For light sources outside this range, adjust the white balance manually **(➜ 84)**.
Also, additional lighting may be necessary.

❶ Control range of this Movie Camera's Auto White Balance Adjustment Mode

❷ Blue sky
❸ Cloudy sky (Rain)
❹ TV screen
❺ Sunlight
❻ White fluorescent lamp
❼ 2 hours after sunrise or before sunset
❽ 1 hour after sunrise or before sunset
❾ Halogen light bulb
❿ Incandescent light bulb
⓫ Sunrise or sunset
⓬ Candlelight

■ White Balance Adjustment

While most recording with a Movie Camera is probably done outdoors under sunlight, video recording is also done very often under artificial light sources, both indoors and outdoors. However, each of these light sources gives the subject slightly different colours.

Human Eyes
Human eyes can easily adjust to different kinds of lighting and see an object with the same colours even under different lighting.

Movie Camera
Unlike human eyes, the Movie Camera does not have the innate ability to adapt to changes in lighting, and they influence the colours being recorded. Therefore, depending on the light source, the picture would be recorded with a bluish or reddish tint. To minimise the influence of the lighting on the colours of the subject, an adjustment called White Balance Adjustment is necessary.

White Balance Adjustment
The White Balance Adjustment determines the colour of the light and adjusts the colours so that white remains pure white. As white is the basic colour of the entire colour spectrum, if white is reproduced correctly, the other colours are correct and natural, too.

Auto White Balance Adjustment
This Movie Camera stores the optimum settings for several common light sources in memory. The Movie Camera judges the recording situation by determining the tint of the light received through the lens and by the White Balance Sensor **(➜ 14)**, and it selects the setting for the most similar tint. This function is called Auto White Balance Adjustment.
However, as the white balance settings for only a few light sources are stored in memory, the white balance is not correctly adjusted for other lighting conditions.

For the range of different types of lighting within which the Auto White Balance Function can provide precise adjustment, refer to the chart **(➜ 168)**. For recording under lighting conditions outside this range, the Auto White Balance Function does not work correctly, and the recorded picture has a red or blue cast. However, the same also applies, if the subject is lit by more than one light source, even if these light sources are within this range.

■ Time Code

Time Code signals are the data which indicates the time in hours, minutes, seconds and frames (25 frames/sec). Having this data included in the recording gives every single picture on the tape its own address.

- The Time Code is automatically recorded as part of the sub code with every recording you make.
- When you insert a new (previously unrecorded) cassette, the Time Code automatically starts from zero. If you insert a recorded cassette, the Time Code continues where the time code of the last previous scene stopped. (In this case, the zero indication [0h00m00s00f] may appear after inserting the cassette, but when the recording starts, the Time Code records from the previous value.)
- You cannot reset the Time Code to zero.
- In playback modes other than the Normal Playback Mode, the Time Code may not be displayed (or not be correct).
- Unless the Time Code is recorded continuously from the beginning of the tape, precise editing may not be possible. To ensure that the Time Code is recorded without interruption, we recommend that you use the Camera Search Function **(➜ 56)** or Blank Search Function **(➜ 58)** before starting to record a new scene.

■ Memory Stop Function

The Memory Stop Function is convenient for the following operations.

Rewinding or fast-forwarding the tape to a desired position

1 **Reset the Tape Counter to zero at the tape position from which you want to play back later. (➜ 134)**

2 **Set [DISPLAY] on the [DISPLAY SETUP] Sub-Menu of the [VCR FUNCTIONS] or the [CAMERA FUNCTIONS] Main-Menu to [MEMORY].**

3 **Start playback or recording.**

4 After playback or recording is finished:
Press the [VCR/CAMERA] Button so that the [VCR] Lamp lights.

5 **Rewind the tape.**
The tape automatically stops approximately at the position at which you reset the counter to zero.

Stopping the editing automatically in audio dubbing

1 **Reset the Tape Counter to zero at the tape position at which you want the editing to stop.**

2 **Set [DISPLAY] on the [DISPLAY SETUP] Sub-Menu of the [VCR FUNCTIONS] or the [CAMERA FUNCTIONS] Main-Menu to [MEMORY].**

3 **Play back a still picture at the point at which you want the audio dubbing to start.**

4 **Start the audio dubbing. (➜ 100)**
The audio dubbing automatically stops approximately at the position at which you reset the counter to zero.

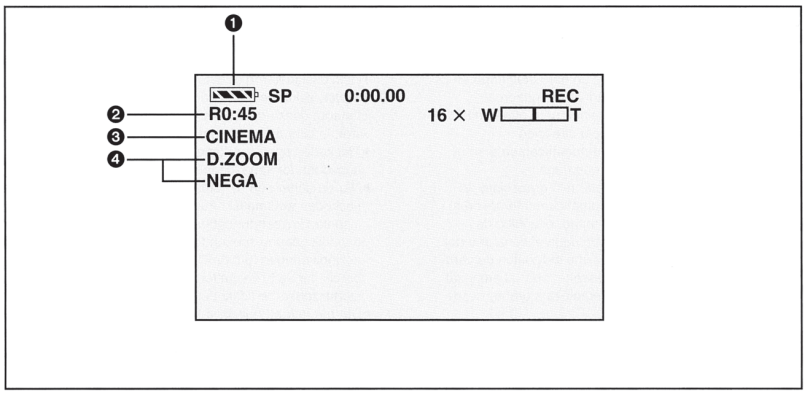

Indications on the LCD Monitor/in the Finder

❶ Remaining Battery Power
As the remaining battery power decreases, the indication changes as follows:
→ → → →
When the battery is completely discharged, the ( ) Indication flashes.
(When you are using the AC Adaptor, the Indication may appear, however, this has no meaning in this case.)

❷ Remaining Tape Time
The remaining tape time is displayed in minutes. (When it becomes less than 3 minutes, the indication starts to flash.)
- If a recording lasts less than 15 seconds, the remaining tape time cannot be displayed correctly.
- The displayed remaining tape time may be shorter than the actual remaining tape time.

❸ Cinema Mode (➜ 40)
When recording in the Cinema Mode, this indication is displayed.

❹ Digital Zoom (➜ 36)
When the Digital Zoom Function is activated, this indication is displayed.
Digital Effects (➜ 72, 74)
When a digital effect is activated, the corresponding indication is displayed.
Playback Zoom (➜ 98)
When the Playback Zoom Function is activated, this indication and the zoom magnification are displayed.

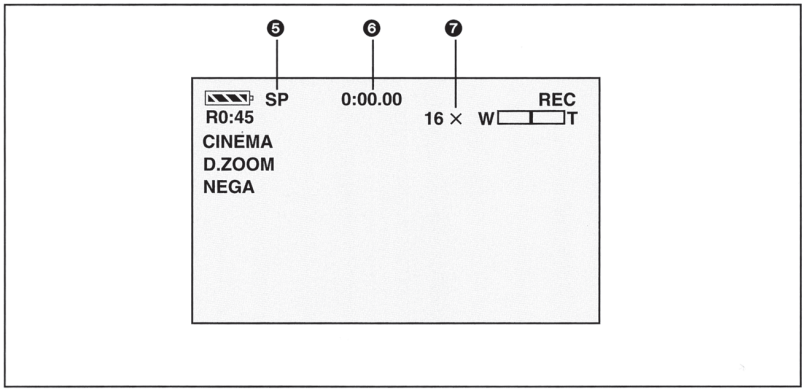

❺ Recording Speed Mode (➜ 24)
The selected Recording Speed Mode is displayed.
SP: Standard Mode
LP: Long-play Mode

❻ Tape Counter, Time Code (➜ 178)
The Tape Counter, Memory Stop Function or Time Code Indication is displayed.

❼ Zoom Magnification (➜ 36)
When you push the [W/T] Zoom Lever up or down, the Zoom Magnification Indication and the Zoom Gauge are displayed.

Recording Mode (➜ 30, 82, 84, 88, 90, 92)
AUTO: This appears when the Mode Selector Switch is set to [AUTO].
MNL: This appears when the Mode Selector Switch is set to [MNL].

Super Image Stabilizer (➜ 42)
: When the Super Image Stabilizer Function is activated, this indication is displayed.

Audio Recording Mode (➜ 100)
12 bit/16 bit: The indication of the Audio Recording Mode that was selected for recording is displayed during playback.

Automatic Printing (➜ 124)
AUTOPRINT: This indication is displayed when the Auto Print Function is being used.

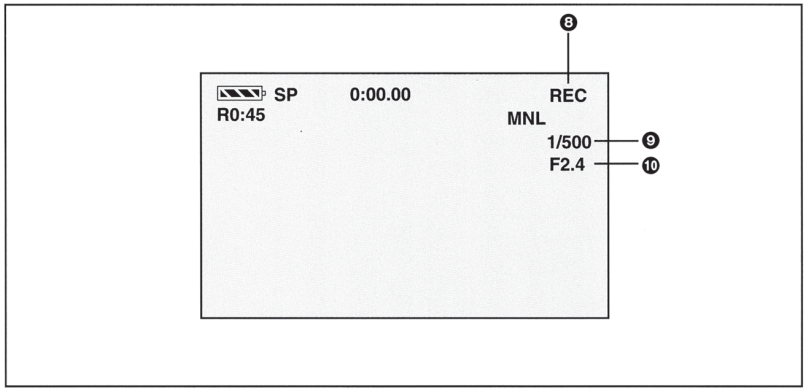

8 Tape Run Indications

REC:	Recording **(➜ 30)**
PAUSE:	Recording Pause **(➜ 30)**
▷:	Playback **(➜ 44)**/Camera Search in forward direction **(➜ 56)**
◁:	Camera Search in reverse direction **(➜ 56)**
❚❚:	Still Playback **(➜ 50)**
▷▷:	Fast-forward/Cue Playback **(➜ 46)**
◁◁:	Rewind/Review Playback **(➜ 44, 46)**
❚▷/◁❚:	Slow Playback in forward direction/ Slow Playback in reverse direction **(➜ 48)**
❚❚▷/◁❚❚:	Still Advance Playback in forward direction/Still Advance Playback in reverse direction **(➜ 50)**
▷▷❙/❙◁◁:	Index Search in forward direction/ Index Search in reverse direction **(➜ 62, 64)**
CHK:	Recording Check **(➜ 32)**
A.DUB ▷:	Audio Dubbing **(➜ 100)**
A.DUB ❚❚:	Audio Dubbing Pause **(➜ 100)**
PHOTO:	Recording in the Photoshot Mode **(➜ 38)**
BLANK:	Blank Search **(➜ 58)**
R ▷:	Repeat Playback **(➜ 158)**

- When you record with the LCD Monitor facing forward using the Mirror Mode, none of the Tape Run Indications shown above appear. Only the Remaining Battery Power Indication, the Recording Indication [●] and the Recording Pause Indication [●❚❚] appear. If the [!] Indication appears, turn the LCD Monitor so that it faces backward and then confirm the displayed warning message(s).

9 Shutter Speed
When you manually adjust the shutter speed, this indication is displayed. **(➜ 90)**

10 Iris Value (F Number)
When you manually adjust the iris, this indication is displayed. **(➜ 92)**

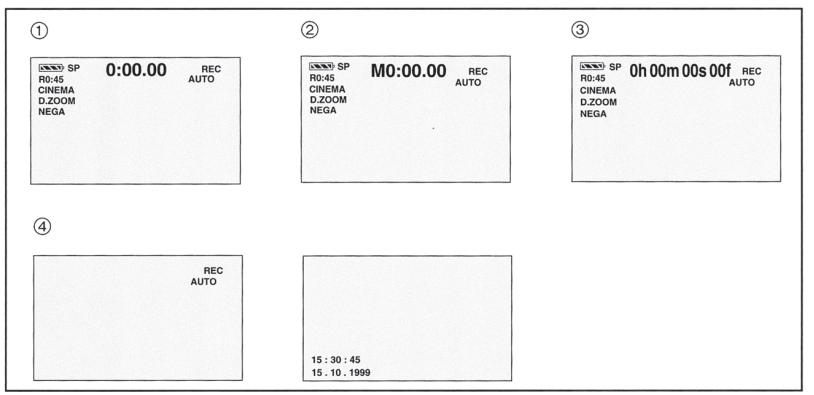

Changing the Indications

By changing the setting for [DISPLAY] on the [DISPLAY SETUP] Sub-Menu of the [VCR FUNCTIONS] or the [CAMERA FUNCTIONS] Main-Menu, the Counter Display Mode can be changed in the order shown in the above illustrations ①–④.

① Tape Counter Indication

② Tape Counter Indication with activated Memory Stop Indication

③ Time Code Indication

④ Simple Indication
(Only a few indications are displayed so that all parts of the picture can be seen clearly.)

Making the Date/Time Indication Appear

This Movie Camera automatically records the date and time, however not directly in the picture but as part of the sub code **(➜ 160)**.
To make the Date/Time Indication appear, set [DATE/TIME] on the [DISPLAY SETUP] Sub-Menu of the [VCR FUNCTIONS] or the [CAMERA FUNCTIONS] Main-Menu to the desired setting.
It is also possible to make the Date/Time Indication appear and change it by repeatedly pressing the [DATE/TIME] Button on the Remote Controller.

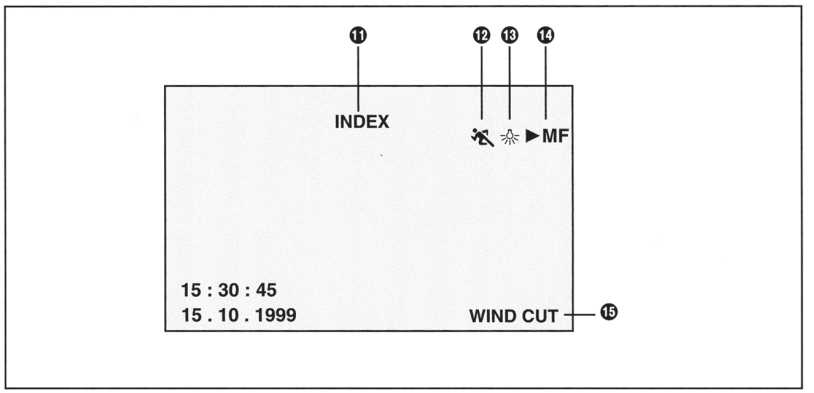

11 Index (➜ 60)
INDEX: The [INDEX] Indication flashes for a few seconds while an index signal is being recorded.

Search Number (➜ 64)
S 1: The figure indicates which number of scene ahead from the present scene is to be played back.

12 Programme AE Mode (➜ 68)
The Programme AE Function offers the following settings:
: Sports Mode
: Portrait Mode
: Low Light Mode

13 White Balance Mode (➜ 82)
The White Balance Mode offers the following possible settings:
: Indoor Mode (recording under incandescent lamp)
: Outdoor Mode
: Last manually adjusted White Balance setting

When the Movie Camera is in the Auto Mode, none of the above 3 indications are displayed.

14 Manual Focus (➜ 88)
If you select the Manual Focus Mode, the [MF] Indication is displayed.
When the Movie Camera is in the Auto Mode, this indication is not displayed.

15 Wind Noise Reduction [WIND CUT]
If you set [WIND CUT] on the [OTHER FUNCTIONS] Sub-Menu of the [CAMERA FUNCTIONS] Main-Menu to [ON], the [WIND CUT] Indication is displayed.

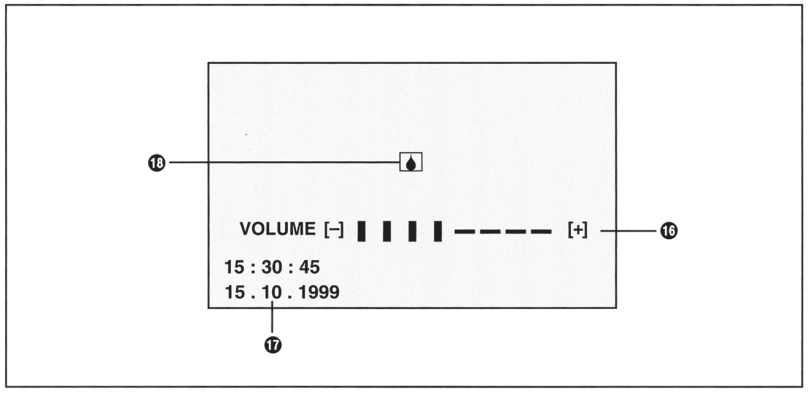

⓰ Sound Volume (➜ 44)
Use this indication to adjust the volume of the playback sound from the built-in speaker.
With the [VCR] Lamp lit, keep the [PUSH] Dial pressed until the [VOLUME] Indication appears. Then turn the [PUSH] Dial to adjust the volume.

⓱ Date and Time (➜ 178)
The time is indicated in the 24-hour system.

⓲ Warning/Alarm
When any of the following indications lights or flashes, confirm the condition of the Movie Camera.

- : Condensation has occurred. **(➜ 150)**
- : The erasure prevention slider of the inserted cassette is open (set to [SAVE]). Audio dubbing was attempted on an unrecorded (blank) part of the tape. No cassette is inserted. **(➜ 22)**
- : The Battery is discharged. Charge it. **(➜ 18)**
- : The built-in battery is discharged. **(➜ 142)**
- : The video heads are dirty. **(➜ 152)**
- END: During recording, the tape has reached its end.
- REMOTE: Wrong Remote Controller Mode is selected. **(➜ 114)**
- PRINTER ERROR: The Video Printer is not connected correctly, or there is some trouble on the Video Printer.
- UNPLAYABLE TAPE (OTHER FORMAT): Playback was attempted on a part of a tape recorded in a different television system.
- UNABLE TO A. DUB (LP RECORDED): Audio dubbing is not possible because the original recording was made in the LP Mode.
- INCOMPATIBLE TAPE: The cassette is incompatible.

Before Requesting Service (Problems & Solutions)

Power Supply

P1: The Movie Camera does not turn on.
S1: Is the Battery or the AC Adaptor connected correctly? Confirm the connection. **(➜ 16)**

P2: The Movie Camera has turned off automatically.
S2: If you leave the Movie Camera in the Recording Pause Mode for more than 6 minutes, it automatically switches off to protect the tape and to conserve battery power. **(➜ 30)**

P3: The Movie Camera quickly turns off.
S3-1: Is the Battery discharged? When the Remaining Battery Power Indication is flashing or the [ ] Indication is displayed, the Battery is discharged. Charge the Battery or attach a fully charged Battery. **(➜ 18, 172)**
S3-2: Has condensation formed? If the Movie Camera is brought from a cold to a warm place, condensation may form inside. In this case, the Movie Camera automatically switches off and no operation can be performed except taking out the cassette. Wait until the Condensation Indication disappears. **(➜ 150)**

Battery

P1: The Battery discharges quickly.
S1-1: Is the Battery fully charged? Charge it with the AC Adaptor. **(➜ 18)**
S1-2: Are you using the Battery in a place where the temperature is very low? The ambient temperature greatly influences the Battery's performance. Its operation time becomes shorter in a cold place. **(➜ 156)**
S1-3: Has the Battery reached the end of its service life? The service life of the Battery is limited. It depends on the way the Battery is used, but when the operation time even after proper charging is too short for normal use, the service life of the Battery has reached its end.

P2: The Battery cannot be charged.
S2: If the DC Input Lead is connected to the AC Adaptor, charging is not possible. Disconnect the DC Input Lead.

Normal Recording

P1: Recording cannot be started even though the Movie Camera is supplied with power and the cassette is inserted correctly.

S1-1: Is the erasure prevention slider of the cassette open? If it is open (set to [SAVE]), recording is not possible. **(➜ 22)**

S1-2: Has the tape reached its end? Insert a new cassette. **(➜ 22)**

S1-3: Is the Movie Camera turned on? **(➜ 30)**

S1-4: Is the [VCR] Lamp lit? If it is lit, recording is not possible. **(➜ 44)**

S1-5: Is the Condensation Indication [💧] displayed? When condensation has formed, no functions except taking out the cassette can be operated. Wait until the Condensation Indication disappears. **(➜ 150)**

Other Recording

P1: The picture on the LCD Monitor/in the Finder suddenly stands still for a few seconds.

S1: Did you press the [PHOTOSHOT] Button? If you press the [PHOTOSHOT] Button, a still picture is recorded for approximately 7 seconds. After approximately 7 seconds, the Movie Camera switches back to the Recording Pause Mode. **(➜ 38)**

P2: The Auto Focus Function does not work.

S2-1: Is the Manual Focus Mode selected? If you select the Auto Focus Mode, the focus is adjusted automatically. **(➜ 88)**

S2-2: Is the subject or recording situation suitable for the Auto Focus Mode? The Auto Focus Function does not work correctly for some kinds of subjects and recording situations. In this case, use the Manual Focus Mode to adjust the focus. **(➜ 162)**

Editing

P1: Audio dubbing cannot be performed.

S1-1: Is the erasure prevention slider of the cassette open? If it is open (set to [SAVE]), editing is not possible. **(➜ 22)**

S1-2: Are you trying to edit parts of the tape recorded in the LP Mode? As the tracks recorded in the LP Mode are narrower than the heads, audio dubbing is not possible. **(➜ 24)**

Indications

P1: The Time Code becomes incorrect.

S1: In the Slow Motion Playback Mode in reverse direction, the counter of the Time Code Indication may not be stable, however, this is not a malfunction.

P2: The Remaining Tape Time Indication disappears.

S2: If you record a still picture in the Photoshot Mode, the Remaining Tape Time Indication may disappear temporarily. However, if you switch the Movie Camera over to the Normal Recording Mode, it appears again.

P3: The Remaining Tape Time Indication does not match the actual remaining tape time.

S3-1: If scenes of less than 15 seconds are recorded successively, the remaining tape time is not indicated correctly.

S3-2: The Remaining Tape Time Indication may show a remaining tape time that is 2–3 minutes shorter than the actual remaining tape time.

Playback (Picture)

P1: No playback picture is reproduced when pressing the Play Button [▶].

S1: Did you press the [VCR/CAMERA] Button so that the [VCR] Lamp lights? When the [VCR] Lamp is not lit, no playback functions can be operated. **(➜ 44)**

P2: Mosaic-like patterns appear in the picture during Cue, Review or Slow Motion Playback.

S2: This phenomenon is a characteristic of the digital video system. This is not a malfunction. **(➜ 46, 48)**

P3: The Movie Camera is correctly connected to a TV, but no playback picture is reproduced.

S3: Did you select "Video Input" on the TV? Carefully read the operating instructions for your TV and select the channel that matches the input sockets used for connection.

P4: The playback picture is not reproduced clearly.

S4: Are the video heads on the Movie Camera dirty? If the video heads are dirty, the picture cannot be played back clearly.

Playback (Sound)

P1: No sound is played back from the Movie Camera's built-in speaker.

S1: Is the volume set too low? With the [VCR] Lamp lit, keep the [PUSH] Dial pressed until the [VOLUME] Indication appears. Then turn the [PUSH] Dial to adjust the volume. **(➜ 44)**

P2: Different sounds are played back together.

S2: [12bit AUDIO] on the [OTHER FUNCTIONS] Sub-Menu of the [VCR FUNCTIONS] Main-Menu is set to [MIX]. Therefore, the original sound and the sound dubbed with audio dubbing are played back together. It is also possible to play them back individually. **(➜ 102)**

P3: The original sound was erased by performing audio dubbing.

S3: If you perform audio dubbing on a recording made in the [16bit] Mode **(➜ 100)**, the original sound is erased. If you want to keep the original sound, be sure to select the [12bit] Mode for the original recording.

P4: No playback sound is reproduced.

S4: Is [12bit AUDIO] on the [OTHER FUNCTIONS] Sub-Menu of the [VCR FUNCTIONS] Main-Menu set to [ST2] even though no audio dubbing has been performed on the cassette that you are playing back?
When you play back a cassette onto which no audio dubbing was performed, [12bit AUDIO] must be set to [ST1]. **(➜ 102)**

Others

P1: The cassette cannot be taken out.

S1-1: Is the Movie Camera supplied with power? Is the AC Adaptor correctly connected or the Battery correctly attached? To remove the cassette, the Movie Camera must be supplied with power, however, it is not necessary to set the [OFF/ON] Switch to [ON].

S1-2: The attached Battery may be discharged. Replace it with a charged Battery.

P2: No operation except taking out the cassette can be performed.

S2: Is the Condensation Indication [💧] displayed? If condensation has formed inside the Movie Camera, it automatically switches off and prevents all operations except taking out the cassette. Wait until the Condensation Indication disappears. **(➜ 150)**

P3: The Remote Controller does not work.

S3-1: The batteries in the Remote Controller are exhausted. Replace them with new "AA", "UM-3" or "R6" type batteries. **(➜ 112)**

S3-2: Is the correct Remote Controller Mode selected? If the Movie Camera's setting for [REMOTE] on the Menu and the mode selected on the Remote Controller are not matched, operating the Movie Camera with the Remote Controller is not possible and the [REMOTE] Indication is displayed. **(➜ 114)**

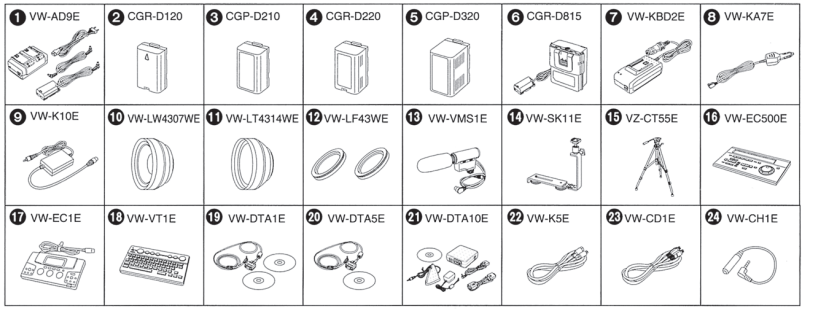

Optional Accessories

1. AC Adaptor
2. Battery Pack (Lithium)
3. Battery Pack (Lithium)
4. Battery Pack (Lithium)
5. Battery Pack (Lithium)
6. Battery Pack (Lithium)
7. Car Battery Charger
8. Car Adaptor Cord
   (It requires the AC Adaptor "VW-AD9E" for using with this Movie Camera.)
9. 5-Pin Synchro Cord
10. Wide Conversion Lens
11. Tele Conversion Lens
12. Filter Kit
13. Stereo Zoom Microphone
14. Shoe Adaptor
15. Tripod
16. Editing Controller
17. Editing Controller
18. Video Titler
19. Personal Computer Connection Kit
20. Personal Computer Connection Kit
21. Personal Computer Connection Kit
22. Edit Cable
23. DV Cable
24. Headphone Conversion Adaptor

●Some accessories are not available in some countries.

	INITIAL/LOGO	ABBREVIATIONS
A	A GND	Analogue GND
	A HASW	Audio Head Amp Switching Pulse
	A HSW	Audio Switching Pulse
	A MUTE	Audio Mute
	A ORP	Audio Overlap Pulse
	A. TR	Auto Tracking
	A0-8, 0-17	Memory Address
	A3V2	AD Converter Reference Voltage
	AB0-4	Address Bus
	AB0-4, AB12-15	Address Bus Line 0-4, 12-15
	ABSF	Focus Encoder Input
	ACI	Analogue Channel Cording IC
	AD	AD Converter
	AD	Auto Date, Analogue Digital Converter
	AD CLK	AD Clock
	AD REC	Audio Delayed REC
	AD0-6	Address
	AD0-6, ADR0-6	Address Data Line
	ADCLK	Analogue Digital Converter Clock
	ADCNT	Analogue Digital Control
	ADCS	Analogue Digital Chip Select
	A-DET	Audio Detect
	ADREC	Audio Delaied Rec
	ADUB	Audio Dubbing
	AE	Auto Expose
	AECNT	Auto Expose Control
	AEE(H)	Audio E-E (H)
	AEH	Audio Erase Head
	AEIRQ	Auto Expose Interrupt Request
	AF/MF	Auto Focus/Manual Focus
	AF DIS CS	AF DIS Chip Select
	A-FADE(L)	Audio Fade (L)
	AF-AMP	AF HALL Bias
	AFCS	Auto Focus Chip Select
	AFRP	Audio PLL Voltage Control
	AF-VN	Zoom Encoder V-Ref (–)
	AF-VP	Zoom Encoder VREF (+)
	AGC	Automatic Gain Control
	AGCCNT	Automatic Gain Control Control
	AGND	Analogue Ground/Audio Ground
	AGS	Anti Ground Shooting
	AH(P) / (R)	Audio Head (Play) / (Record)
	AHASW	Audio Head Amp Switch Pulse
	AHSW	Audio Head Switch Pulse
	AI, AO	Buffer Input, Output
	AIBCK	Bit Clock (to A/D Converter)
	AIDAT	Serial Data (to A/D Converter)
	AILRCK	L/R Clock (to A/D Converter)
	AIMCK	Master Clock (to A/D Converter)
	ALC CNT	Auto Level Control Control
	ALC MAIN	Auto Level Control Drive
	ALE	Address Latch Enable
	A-LOCK	Full Auto Switch
	A-MUT(H)	Audio Mute (H)
	ANLPTH	Analogue Loop Through High
	AORP	Audio Overlap Pulse
	APCNT	Aperture Control
	APS	Auto Power Save
	ART VH	Artifical Vertical Sync
	AT CNT	Automatic Tracking Gain Adjust
	ATF	Automatic Track Finding
	ATFCLK	41.85MHz Clock
	ATFG	Auto Track Gain
	ATL	Auto Lock Select
	ATN	Absolute Track Number
	ATR OFF(H)	Auto Tracking Off (H)
	ATV	Advanced TV
	AUDIO(N)	Audio (Normal)
	AUX	Auxiliary
	AVDD	Analogue VDD
	AVSS	Analogue Ground
	AWTB	Auto White Balance B-Y
	AWTR	Auto White Balance R-Y
B	BACK	Back-up
	BACK UP	Microcomputer Back-up
	BACK VDD	Back-up Power
	BATT	Battery
	BATT ALARM	Battery Alarm
	BATT REF	Reference Voltage for Battery
	BCB	B Carrier Balance
	BCBM(B-Y)	B-Y Carrier Balance
	BCBM(R-Y)	R-Y Carrier Balance
	BD0-7	REC/Play In/Out Buss
	BDCK	Standard Bus Data Clock (9MHz)
	BDEN	Standard Bus Data Enable
	BEND	Data Block End Request
	BF	Burst Flag Pulse
	BFA	Burst Flag Pulse for Encorder
	BFO/BFI	Burst Flug Input/Output
	BI, BO	Buffer Input, Output
	BL	Back Light
	BL ON	Back Light ON (L)
	BL4V	Back Light 4V
	BLC 0, 1	Back Light Y Control Out, In
	BLDI/O	Back Light Drive Input/Output
	BLK	Blanking Pulse
	BLKA	Blanking for Encorder
	BLKA	Blanking Pulse for Encorder
	BLKI/O	Blanking Pulse In/Out

	INITIAL/LOGO	ABBREVIATIONS
	BLKZ	Blanking Pulse for Zoom Encorder
	BM	Balance Modulator
	BQUIET	Bus Out Control Signal
	BUF IN/OUT	Buffer In/Out
	B-Y KB	B-Y Carrier Balance
	B-YO	B-Y Signal Out
C	C A In/Out	Pre-Aperture In/Out
	CAPSTP	Capstan Stop Flag
	C CNT	Colour Control
	C SYNC	Composite Sync Signal
	C/N	Carrier/Noise
	C0-7, C00-07	Chrominance Signal 0-7
	CAGAIN	Aperture Gain Control
	CAM	Camera
	CAM CLK	Camera Clock
	CAM RST	Camera Reset
	CAM SIOC	Camera Serial In/Out Contol
	CAM T	Camera Test
	CAM TL	Capstan Trque Limit
	CAP EC	Capstan Trque Control
	CAP P(H)	Capstan Power On (H)
	CAP R/F/S	Capstan Reverse (H)/Stop (M)/Forward (L)
	CAP SW	Capstan Power Control Switch
	CAPSTP H	Capstan Stop Flag (Stop High)
	CAPVM	Capstan Motor Current
	CAPVS	Capstan Motor Power Control Switch
	CAS	Compresion, Audio Process, Shuffling/Deshuffling
	CAS	Memory Address Strobe (Active Low)
	CASDOWN, DWN	Cassette Down (L)
	CB, CR	Chroma B, Chroma R
	CBLK	Composite Blanking Pulse
	CC	Channel Cording
	CCA	Curent Drive Control
	CCA	Current Control Amp
	CCD	Charge Coupled Devise
	CCW	Counterclockwise
	CD SP0-7	Digital Chroma
	CDS	Correlate Double Sampling Signal
	CDS1, 2	Sampling Pulse for CCD Output Signal
	CE	Chip Enable
	CE	Control Pulse Erase
	CEC	Capstan Error Code
	C-ERA(H)	Control Erase (H)
	CFEM	Chrominance Memory Signal
	CFM	Chrominance Field Memory
	CFM1-4	Chroma Field Memory Signal
	CG CLK	Character Generator Clock
	CG CLK DATA	Clock Generator Data
	CG DATA	Character Generator Data
	CGC	Chrominance Gain Control
	CGCS	Character Generator Chip Select
	CGO	Character Generator Serial Data
	CH	Charge

	INITIAL/LOGO	ABBREVIATIONS
	CH1	Channel 1 (Odd Field)
	CHR	Character
	CHR BACK	Character Back-up
	CHR MIX	Character Mix
	CI, CO	Buffer In/Out
	CI,CO	Buffer Input & Output
	CIF	Control Signal Forward Input
	CIF, CIR	Positive Control Pulse, Negative Control Pulse
	CIR	Control Signal Reverse Input
	CK	Clock
	CL/CLK	Clock
	CLASS	Classeffication Signal for Compress (DCT/VLC)
	CLASS 0.1	Class Control Signal Durring DCT/VLC
	CLK135	13.5MHz System Clock
	CLK18	18MHz System Clock
	CLK2	Clock 2 (824XFH: 12.875MHz)
	CLK246	24.576MHz Clock
	CLK27	27MHz System Clock
	CLK450	450KHz Clock
	CLKDCLK	Digital Clock
	CLK-PH	Clock Phase Control
	CLK-REF	Reference Clock
	CLP-RST-H	Clamp Reset High Signal
	CLX	TFT X-axis Transmission Clock
	CLX, CLX1-4	Shift Clock for X Direction (LCD Panel)
	CLY	Shift Clock for Y Direction (LCD Panel)
	CLY	TFT Y-axis Transmission Clock
	CLY FG	Cylinder FG Signal
	CMEMO0-3	Chroma Memory Output Signal 0-3
	CMIX	Character Mix
	CMO	Chrominance Memory Output
	COMPC	Position Detection Pulse
	COM RDY	Serial Enable Signal
	CMODE	Camera Mode
	CNCLK	Clock
	CNR	Chrominance Noise Reduction
	CNT, CONT	Control
	CO	Control Out
	CO0-7	Chrominance Output 0 to 7 (Digital)
	COM	Common
	COM RDY	Serial Transmission Enable
	COMB	Comb Filter
	COS EQ	Cosin Equalizer
	CP	Clamp Pulse
	CP ON(H)	Camera Power On(H)
	CP2, 20	Clamp Pulse
	CP2A, CP2O	Encoder Clamp Pulse
	CPN	Component Signal
	CPOB	Clamp Pulse for Optical Blanking
	CPS	Composite Signal
	CPV	Gate Scan Clock
	CR OUT	Pre Apature Out
	CR POW SW	Camera Remote Power On Switch
	CRA	Aperture Gain Control

	INITIAL/LOGO	
	CRA	Pre Apature Gain Control
	CRST	Camera Reset
	CS	Chip Select
	CS 0-7	Chrominance Signal Out 0-7
	CSEL	Clock Phase Select
	CSI 0-7	Chrominance Signal In 0-7
	CTSW	Crosstalk Switch
	CURR	Current
	CW	Clockwise
	CYL EC	Cylinder Motor Trque Control
	CYL PG	Cylinder Motor PG
	CYL VM	Cylinder Motor Current or Power
D	D CLK	Digital Clock
	D MODE	Digital Mode Switch Signal
	D01-03	Zoom 01-03
	DA UV SEL	D/A Convertor U/V Select
	DAC	Digital Analogue Converter
	DAG	Digital Analogue Ground
	DB0-7	Data 0-7
	DB0-7	Microprocessor Data
	DCC	DC Clamp Control
	DCCNT	DC Control
	DCI	Digital Channel Cording IC
	DCLR	Digital Clear
	DCP	Digital Clamp Pulse
	DCS-CLK, DA	CAS & DV I/F Serial Clock
	DC-STP1	DCS Serial Start
	DC-STP2	DCS Serial Stop
	DCT	Discrete Cosine Transform (Compression)
	DCX7	Serial Data
	DEDP 0-3	Playback Data
	DEDR 0-3	Rec Data
	DEMO	Demodulation
	DEMP	A/D Convertor Empahsis Control
	DEMP	De-Emphasis
	DFD 0-7	Encode Data In/Out Between Shaffling Memory
	DFD0-7	Encode Input/Output Signal for Shuffling Memory
	DIBDCK	Bit Clock
	DICLK	Digital Clock
	DIDAT	Serial Data
	DIDAT	Serial Data Durring Digital Audio In
	DIF	Digital Interface
	DILRCK	L/R Clock
	DILRCK	Serial Clock Durring Digital Audio In
	DIMCK	Master Clock
	DIMCK	Mater Clock Durring Digital Audio In
	DIO 1-8	Data In/Out
	DIOS	Data In/Out Select Control Signal
	DIOS	Select Signal for Digital In/Out
	DIS	Digital Image Stabilizer
	DIS R/B	Digital Image Stabilizer Read (H)/Busy (L)
	DIS R/B	DIS IC Rady/Busy
	DIS/KAND	Digital Image Stabilizer/Sensitivity

	INITIAL/LOGO	ABBREVIATIONS
	DISCS	Dis Chip Select
	DISP	Display
	DL	Delay Line
	DOBCK	Audio A/D Convertor Bit Clock
	DOCTL	Data Output Control Signal
	DODAT	Serial Data (to D/A Converter)
	DOLRCK	Audio A/D Converter LR Clock
	DOLRCK	L/R Clock (to D/A Converter)
	DOMCK	Audio A/D Converter Master Clock
	DOMCK	Master Clock (to D/A Converter)
	DQ 1-16	Memory Data
	DRAM CAS	D-RAM Colum Address Strobe
	DRAM OE	D-RAM Out Enable
	DRAM RAS	D-RAM Read Address Strobe
	DREC	AV Delayed REC Start Pulse
	DRK	Dark (LPF Switch for Auto Focus)
	DS1, 2	Double Sampling Pulse
	DSF 0-7	Data In/Out for Shaffling Memory
	DSF 0-7	Input/Output Data to Shuffling Memory (18MHz)
	DSP	Digital Signal Processor
	DSP R/B	DSP IC Rady/Busy
	DSP-48K-H	DSP IC Clock Select
	DSTB	Data Stobe Signal
	DSV	Digital Sum Variation
	DV	Digital Video
	DVB	Digital Video Broadcast
	DVC	Digital Video Cassette
	DVDD	Digital VDD
	DVIO	Digital Video Input Output
	DVSS	Digital Ground
	DX	Shift Data for X Direction (for LCD)
	DY	Shift Data for Y Direction (for LCD)
	DY	TFT Y-axis Shift Data
	DZ	Digital Zoom
E	E Snap	Electric Snap Shot
	E ZM	Electric Zoom
	E2 CS or E2P CS	EEPROM Chip Select
	E2 R/B	EEPROM Rady/Busy
	E2P	EEPROM
	EARP	Earphone
	EC	Torque Control
	ECC	Error Correction Cording
	ECM	Electric Condencer Mic
	ECR	Reference Voltage for Capstan Torque
	EDA	Error Correction, DCI, ATF Servo
	EE CS	EEPROM Chip Select
	EE R/B	EEPROM Read (H)/Busy (L)
	EEPROM	Electric Erasable Programable Read Only Memory
	EIS	Electric Image Stabilizer (DIS)
	EMP	A/D Convertor Emphasis Control
	ENAB	Enable
	ENV	Enverope
	EOB	End of Block

INITIAL/LOGO		ABBREVIATIONS
	EQ	Equalizer
	EVF	Electric View Finder
	EXT DC	External DC (AC Adaptor)
	EXT DC(H)	AC Adaptor DC (H)
	EXT NOREG	AC Adaptor 6V
	EXT S DATA	Serial Data for Edit
	EXT SCK	Serial Clock for Edit
	EZOOM	Electric Zoom
F		
	F ENC	Lens F-Value
	FACT MODE	Factry Mode (not used in the service)
	FB	Feed Back
	FC	Saw Tooth Signal In
	FCK	Clock
	FCO	Saw Tooth Signal Generator
	FENC	Focus Encoder
	FEND	Frame End Pulse
	FH2B	FH/2 (15.625KHz / 2=7.8125KHz)
	FIX OSD	Auto Tracking Off (H)
	FLICK	Flicker Output
	FM	Field Memory
	FM0-7	Field Memory 0-7
	FMCO0-3	Field Memory Chrominance Out 0-4
	FMDIR	Focus Motor Direction
	FMOEM	Field Memory Enable
	FMOEO	Field Memory Enable
	FMT1-4	Focus Motor Terminal 1-4
	FMY00-07	Field Memory Luminance Out 0-7
	FMYI0-07	Field Memory Luminance In 0-7
	FNO	F Value
	FPS	Frame Refference Signal
	FR	Capstan Reverse High
	FRP	Frame Refference Pulse
	FRPSO	Frame Start Pulse
G	G1, G2, G3	Gap 1, 2 and 3
	GCA	Gain Control AMP
	GCNT	Gain Control
	G-CNT	AGC Adjustment
	GCTRL	Gain Control
	GENE	Generator
	GF	FG AMP Terminal
	GSW	Ground for Switching Power
H	H/M/N	Hi-Fi / Mix / Normal
	H/N	Hi-Fi / Normal
	H1, 2	H. CCD Drive Pulse
	HAP	Horizontal Aperture
	HASW	Head AMP Switching Pulse
	HB	Hall Bias
	HBR SET	High Brightness Set
	HBRST	High Brightness Set
	HCLR	High Clear
	HCP	Shift Clock for Horizontal Drive

INITIAL/LOGO		ABBREVIATIONS
	HD	Horizontal Drive Pulse
	HDTV	High Definition TV
	HEX	Hexadecimal
	HG	Hall Gain
	HID	Head Switching Pulse
	HLT	High Bright Signal
	HALL IN(+), (–)	Input Signal from Hall IC
	HP	Headphone
	HPF	High Pass Filter
	HSE	Modulated Data Output
	HSP	Timing Pulse for Shaffling Memory
	HSS	Horizontal Sync Signal
	HSW	Head Switching Pulse
	HS-WT	High Speed Zoom
	HSZ	High Speed Zoom
I	I/F	Interface
	I-2 C	Inter Integrated Circuit
	ID(H)	Wide Television (H)
	IMP	Inter Microprocessor Protocol
	INF	CCD Input Signal 1
	INF	Input Frame Signal
	INS	CCD Input SIgnal 2
	INTER	Interval Recording
	INV	Inverter
	IOU	R-Y Analogue Signal Output
	IOV	B-Y Analogue Signal Output
	IOY	Y Analogue Signal Output
	IR	Infrared Rays
	IRDET	Imfrared Ray Detection
	IREF	Current Adjustment Terminal
	IRIS/SH	Iris / Shutter Control
	IRQ	Interrupt Request
	ITI	Insert & Track Information
J	JPEG	Joint Photographic Image Cording Experts Group
K	KANDO	Digital Gain Up
	KB	Carrier Balance
	KEY IN	Key Scan
	KND	Digital Gain Up
	KNEE	Luminance Compensate
L	LCD	Liquid Crystal Display
	LCD P(L)	LCD Power On (L)
	LD	Load Pulse
	LDD	Liquid Direct Drive
	LEDCNT	LED Control
	LI-BATT	Lithium Battery
	LOAD	Loading
	LOAD F, R	Loading Direction (F: Forward / R: Reverse)
	LPF	Low Pass Filter
	LRMONO	Monoral Audio (L + R)
	LSB	Least Significant Bit